Commercial Electric Heat Pump Water Heaters

Air-to-Water

The Energy-Efficient, "Environmentally-Friendly" Choice From The Commercial Water Heater Experts

Commercial Electric Heat Pump Water Heaters from A. O. Smith

Our impressive line of "Environmentally-Friendly" renewable energy products has expanded to include one of the most energy-efficient and innovative commercial water heaters on the market. This efficency is achieved by capturing heat typically discarded from the building.

Commercial electric heat pump water heaters are up to three times more efficient than standard electric water heaters and up to five times more efficient than conventional gas water heaters. In applications where the need for hot water and space cooling occur simultaneously, heat pump water heaters maximize cost savings providing for the quickest payback. The time has never been better to go green. Commercial electric heat pump water heaters allow business owners to capitalize on energy efficiency, realize a quick return on investment and promote their green initiative.

COMMON APPLICATIONS

Commercial: Restaurants/Kitchens
Institutional: Hospitals and Schools
Military: Barracks
Municipal: Fire Stations
Industrial: Commercial Laundry Facilities

A.O. Smith®

COMMERCIAL ELECTRIC HEAT PUMP WATER HEATERS

WHY ARE HEAT PUMP WATER HEATERS AN "ENVIRONENTALLY-FRIENDLY" CHOICE?

- Coefficient of performance (COP) up to 4.2, generates significant energy savings (up to 80% compared to standard electric water heaters) resulting in a quick payback on investment.
- No fossil fuels are used or burned at the source
- "Ozone-Friendly" R-134a refrigerant
- Uses one third of the electricity a standard electric water heater does.
- Contributes to room cooling
- Recovers heat typically discarded by cooling, refrigeration, clothes driers, and other equipment

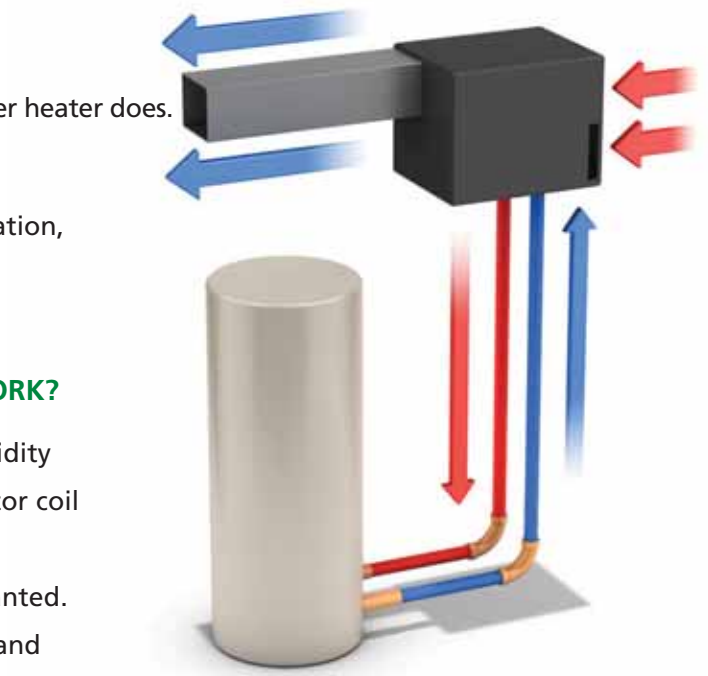

TYPICAL INSTALLATION

HOW DO ELECTRIC HEAT PUMP WATER HEATERS WORK?

Electric heat pump water heaters capture heat and humidity from the surrounding atmosphere through the evaporator coil and utilize it for heating water. Simply put, heat pumps move heat from where it is not needed to where it is wanted. This innovative technology provides low cost hot water and supplemental cooling that can be directed where needed for even greater savings.

REFRIGERATION CIRCUIT DESCRIPTION:

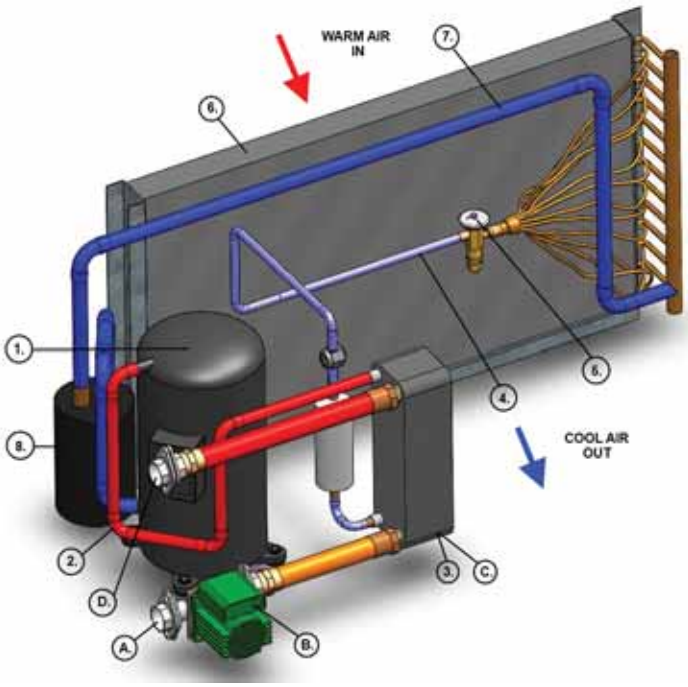

COMPONENT REFRIGERATION CIRCUIT	REFRIGERANT STATE
1) COMPRESSOR	GAS
2) HOT GAS LINE	GAS
3) CONDENSER / HEAT EXCHANGER	GAS TO LIQUID
4) LIQUID LINE	LIQUID
5) THERMOSTATIC EXPANSION VALVE (TXV)	LIQUID
6) EVAPORATOR	LIQUID TO GAS
7) SUCTION LINE	GAS
8) ACCUMULATOR	GAS / LIQUID

COMPONENT WATER CIRCUIT

A) WATER INLET
B) WATER PUMP
C) HEAT EXCHANGER / CONDENSER
D) WATER OUTLET

SPECIFICATION TABLE

MODEL NUMBER	PERFORMANCE					AIR VOLUME (CFM**)	WATER FLOW RATE (GPM)	DIMENSIONS				APPROX SHIPPING WEIGHT (lbs)
	WATER HEATING CAPACITY		COOLING CAPACITY		C.O.P. (Heating)			WATER CONNECTIONS (FPT)	WIDTH	DEPTH	HEIGHT	
	kW	Btu/hr*	Btu/hr*	Tons Of Cooling								
AWH-35	10.4	35,500	27,500	2.3	3.9	1040	7	1.0”	40”	26”	24.75”	315
AWH-55	17.0	58,000	45,500	3.8	4.1	1650	11	1.0”	47”	32”	28.5”	405
AWH-75	22.3	76,000	59,000	4.9	3.9	2150	15	1.5”	57”	32”	28.5”	485
AWH-100	28.7	98,000	78,000	6.5	4.2	3200	20	1.5”	63”	38”	42.5”	660
AWH-115	33.1	113,000	89,000	7.4	4.2	3200	23	1.5”	63”	38”	42.5”	665
AWH-140	41.6	142,000	110,000	9.2	3.9	3800	28	2.0”	63”	38”	42.5”	725
AWH-170	50.1	171,000	133,000	11.1	3.9	4900	34	2.0”	75”	46”	42.5”	880

*Performance rating at 75º F entering air temperature and 55% relative humidity, 100ºF entering water temperature.
**Blower design at 0.35” external static pressure
C.O.P. = coefficient of performance
Entering air temperature operating range - 50°F (10°C) to 95°F (35°C) - High Ambient Air Kits are available to allow operation up to 120°F (49°C).
Entering water temperature operating range - 50°F (10°C) to 140°F (60°C).

Standard Features

- *Scroll compressor technology provides reliable service and energy savings.*
- *Double wall condenser rated for potable water heating.*
- *Factory-installed circulating water pump - sized for 25 equivalent feet of supply and return water piping for a total of 50 equivalent feet.*
- *Factory provided Digital Temperature Controller with remote tank temperature probe and sensor well for storage tank.*
- *Standard supply and return air duct connections for using air from an alternate location as a heat source or directing cool dehumidified air for spot cooling indoors.*

Optional Features

- *Power Options: Standard voltage is 208/230 VAC, 3 phase on all models. Units can be ordered with 460 VAC, 3 phase on all models and 208/230 VAC 1 phase on AWH-35 and AWH-55 only.*
- *Corrosive duty package: The corrosive duty package includes a 316 stainless steel cabinet and a polyurethane coating applied to the cooling coil and blower housing for superior corrosion protection. This package is recommended for installations within 5 miles of the seacoast.*
- *Fully insulated cabinet for noise reduction.*
- *Units can be ordered without factory installed pump.*

Accessories

- *Removable and washable metal mesh air filters.*
- *High Ambient Air Kits - allow operation up to 120°F (49°C) entering air temperature to recover more heat when available. Note: these accessory kits are required on installations with consistent entering air temperatures at or above 95°F (35°C).*

HIGH AMBIENT AIR KIT PART NUMBERS	
AWH-35	9500012730
AWH-55	9500012731
AWH-75	9500012732
AWH-100	9500012733
AWH-115	
AWH-140	9500012734
AWH-170	9500012735

Warranty

- *Five year on compressor*
- *One year on parts*

A. O. Smith Water Products Company
500 Tennessee Waltz Pkwy Ashland City, TN 37015
www.hotwater.com

 ©2013 A. O. Smith Corporation A. O. Smith reserves the right to make product changes or improvements at any time without notice. Printed in U.S.A