REPLACEMENT PARTS LIST

BOILERS FOR HYDRONIC HEATING & HOT WATER SUPPLY
VF MODELS VB/VW 500, 750, 1000
SERIES 200/201

A.O. Smith Water Heater Parts Fulfillment
125 Southeast Parkway • Franklin, TN 37068
www.hotwater.com • 1-800-433-2545

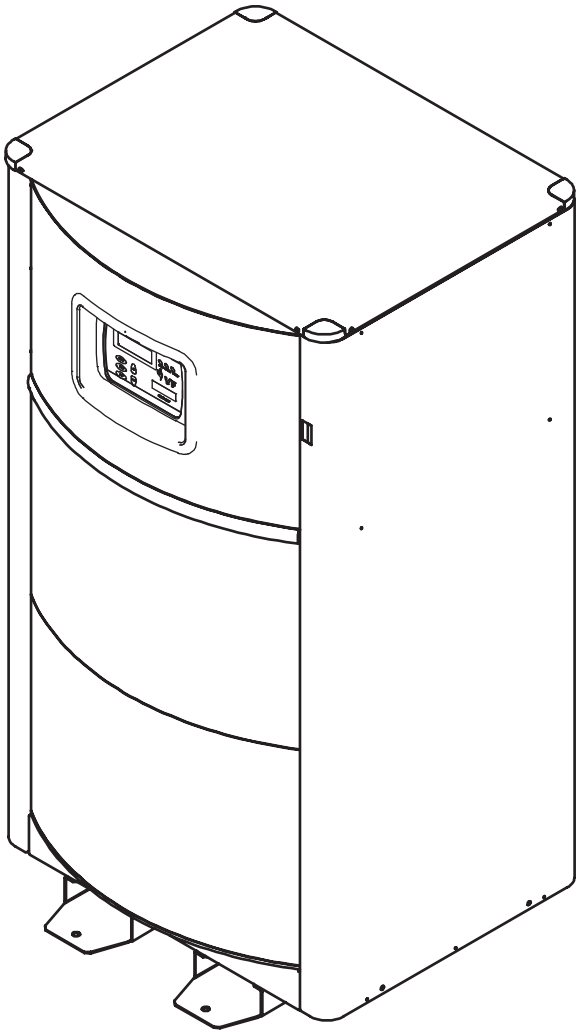

GAS AND BURNER ASSEMBLY PARTS LIST

Item	Description	VB/VW 500	VB/VW 750	VB/VW 1000
1	Blower	9007238005	9007238005	9007238005
2	Venturi - Gas/Air	212311-000	212311-000	212311-000
3	Gas Valve	9007414005	9007414005	9007414005
4	Low Pressure Gas Switch (Natural)	9007625005	9007625005	9007625005
4	Low Pressure Gas Switch (Propane)	9004476215	9004476215	9004476215
5	Blower Gasket	212838-000	212838-000	212838-000
6	Burner	9007224005	9007225005	9007226005
7	Adapter Gasket	320860-000	320860-000	320860-000
8	Burner Gasket	320860-001	320860-001	320860-001
9	Igniter	9004504205	9004504205	9004504205
10	Flame Rods	9005892215	9005892215	9005892215
11	Replacement Heat Exchanger	9006308005	9006309005	9006310005
12	Blower Adapter	212341-000	212341-000	212341-000
13	Vent Adapter	212339-000	212339-000	212339-000
14	Hex Flange	212325-000	212325-000	212325-000

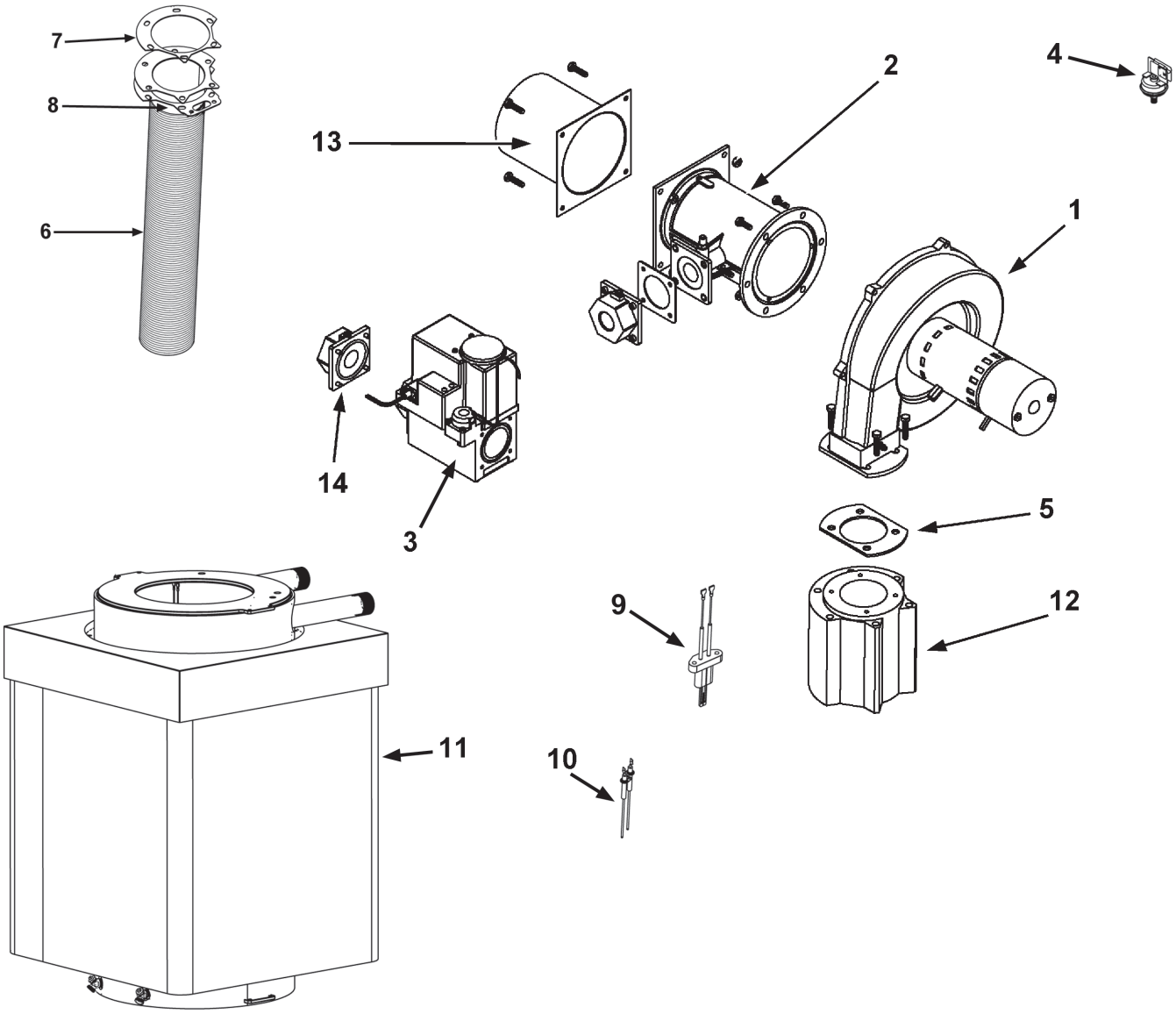

A.O. Smith Water Heater Parts Fulfillment
125 Southeast Parkway • Franklin, TN 37068 • 1-800-433-2545 • www.hotwater.com

CONTROL ASSEMBLY

Item	Description	Order Number
1	Control Board	9007416005
2	Power Distribution Board	9007310005
3	Variable Frequency Drive	212651-000
4	120 Volt Pump Relay	9006612005
5	Blocked Inlet Switch	9008010015
6	Blower Prover Switch	9007242005
7	Blocked Flue Switch	9008009015
8	Flow Switch	9005680205
9	Inlet Probe	9007820015
10	MRHL/Outlet Probe	9007821015
11	Remote Probe	9007822015
12	Transformer 110VA	9007405005
13	User Interface Module (not shown)	9007413005
14	Alarm Buzzer	317206-000
15	LWCO Kit	9007337005
16	Wire Harness Kit VW (Not Shown)	212795-000
13	Wire Harness Kit VB (Not Shown)	212795-001

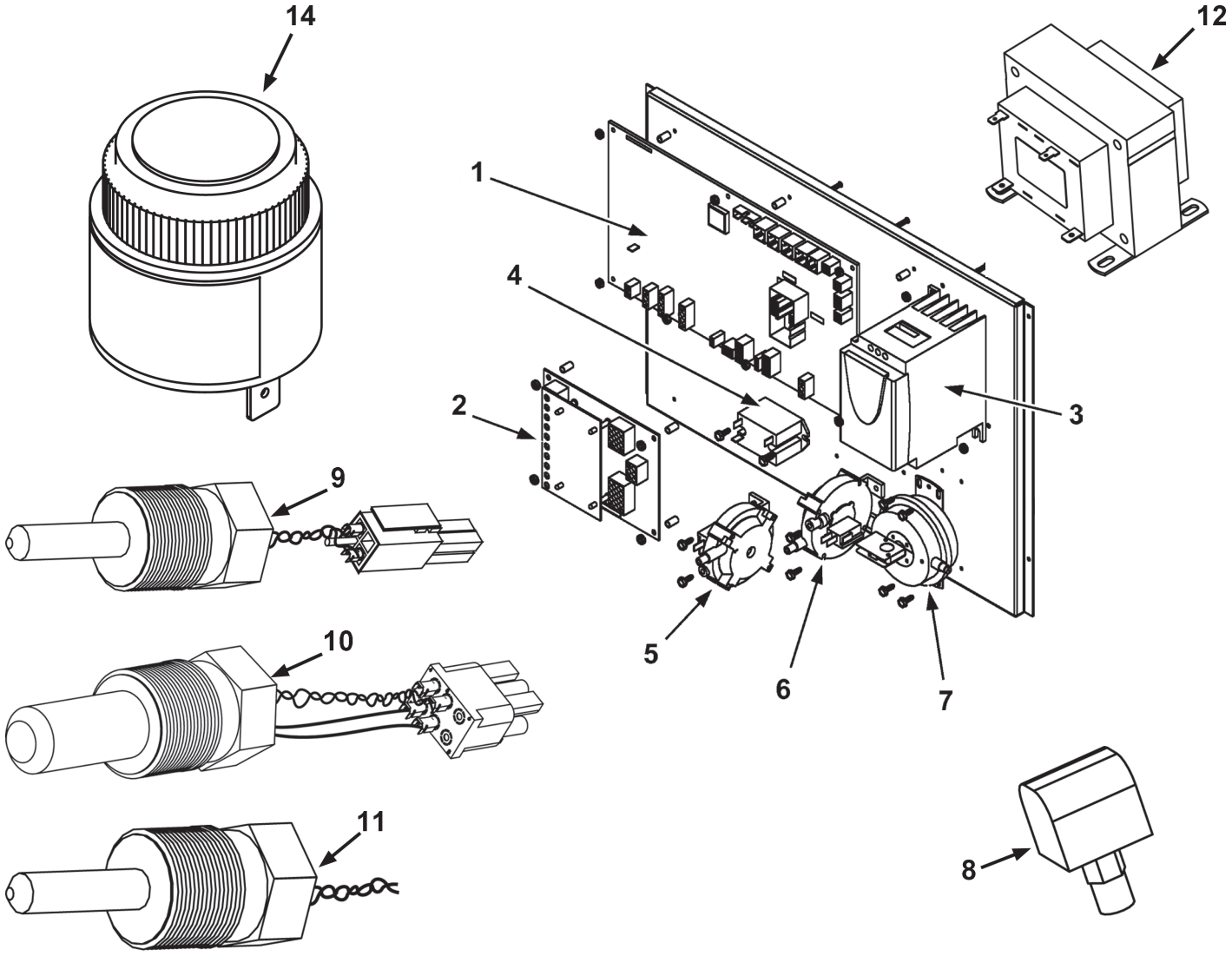

A.O. Smith Water Heater Parts Fulfillment
125 Southeast Parkway • Franklin, TN 37068 • 1-800-433-2545 • www.hotwater.com

MISCELLANEOUS PARTS LIST

Item	Description	Order Number
1	Relief Valve - 50#	9007332005
1	Relief Valve - 125#	9005352205
2	Inlet Vent Terminal	9005810205
3	Vertical Vent Terminal	191777-000
4	Horizontal Vent Terminal	191960-000
5	Boot Tee	192034-000
6	Pump	9006898005
7	Condensate Cover (Not Shown)	192036-000

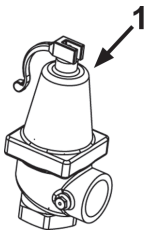

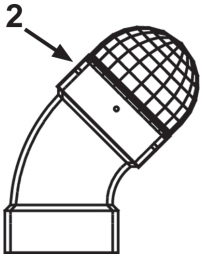

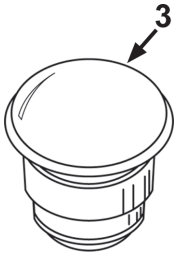

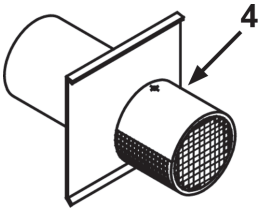

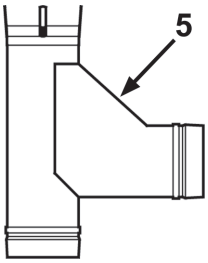

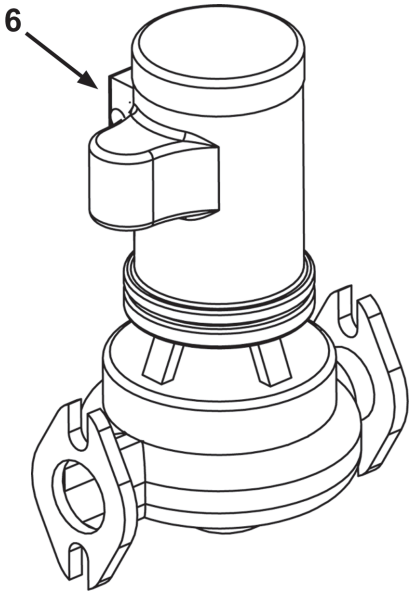

A.O. Smith Water Heater Parts Fulfillment
www.hotwater.com
1-800-433-2545
© 2010 A. O. Smith Corporation