A.O. Smith Water Heater Parts Fulfillment
125 Southeast Parkway • Franklin, TN 37068
Phone: 1-800-433-2545 • www.hotwater.com

"AT A GLANCE" BTH 300/400 QUICK INSTALLATION TIPS

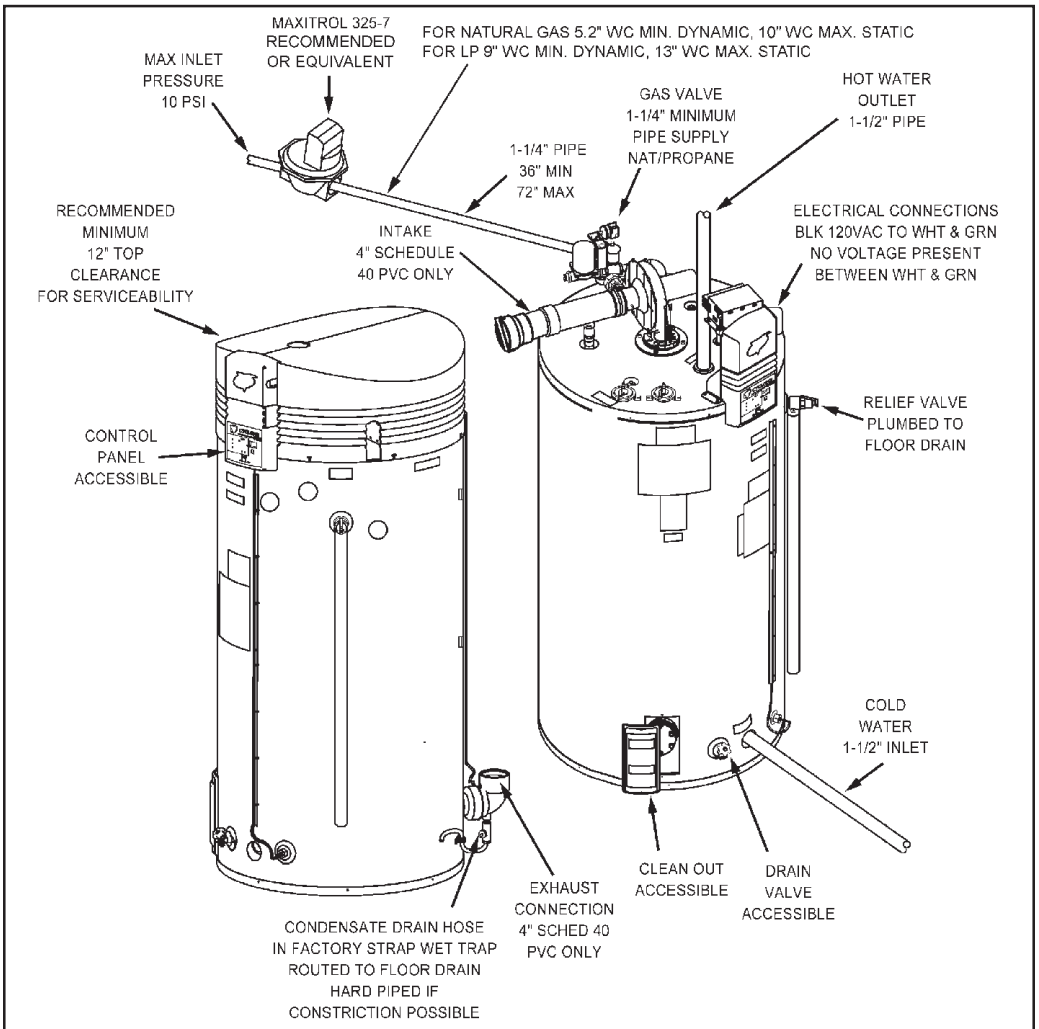

SEE MANUAL FOR COMPLETE INSTALLATION INSTRUCTIONS & DETAILS

Horizontal Sidewall Venting

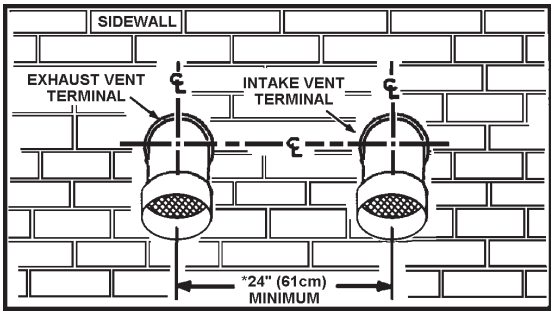

Vertical Rooftop Venting

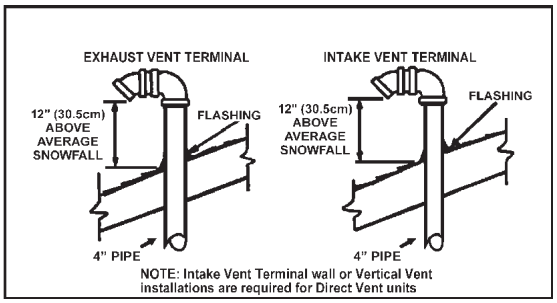

PRINTED IN U.S.A. 0706
PART NO. 197062-002