Residential Gas Ultra-Low NOx Power Vent Water Heaters

PROMAX®
ULTRA-LOW NOx POWER VENT

The ProMax Ultra-Low NOx power vent water heaters utilize an innovative burner system, a combination of radiant heat and excess air to comply with the South Coast Air Quality Management District and other California Air Quality Management Districts with similar requirements of less than 10 ng/J for ultra-low NOx emissions. The 0.68 Energy Factor qualifies these models for ENERGY STAR®.

FEATURES

POWER VENTING MADE SIMPLE
- Thru-the-Wall or Thru-the-Roof power venting using either 2" or 3" PVC, ABS or CPVC vent pipe.

INTELLI-VENT™ GAS CONTROL
- Advanced electronics for more precise control of water temperature and easy to understand system diagnostics.

QUIET AND EFFICIENT BLOWER
- Factory-installed 6-foot power cord with standard 3-prong male connector provided. Electrical requirements; 110/120 VAC power source, less than 5 amp draw.

DURABLE, ULTRA-LOW NOx BURNER CONSTRUCTION
- Components of the burner system are made of a strong inconel alloy and stainless steel that is designed to withstand high temperature applications. All burner components have undergone rigorous reliability testing to ensure long life.

COMBINATION THERMOSTAT/ECO
- Utilizes an intermittent ignition gas valve (no standing pilot) with thermistor temperature sensor and built-in high temperature cut off.

DYNACLEAN™ DIP TUBE
- Helps reduce lime and sediment buildup, maximizes hot water output. Made from long-lasting PEX cross-linked polymer.

COREGARD™ ANODE ROD
- Exclusive aluminum anode has a stainless steel core, protects tank against corrosion longer versus standard steel anodes.

FVIR COMPLIANT
- Equipped with a flame arrestor that provides smooth ignition and ensures that in the event of accidental exposure to flammable vapors, that vapors are safely combusted inside the sealed chamber.

ENERGY STAR® QUALIFIED
- Meets September 1, 2010 tier II ENERGY STAR requirements and is eligible for most utility rebate programs based on Energy Factor (EF) ratings.

CODE COMPLIANCE
- Design Certified by CSA. Meets CEC codes. Meets the Federal Energy Efficiency standards effective January 20, 2004, according to the National Appliance Energy Conservation Act (NAECA) of 1992 and meets the thermal efficiency and standby loss requirements of the U.S. Department of Energy and current edition of ASHRAE/IESNA 90.1. All models are certified at 300 PSI test pressure and 150 PSI working pressure.

6-YEAR LIMITED TANK & PARTS WARRANTY
- For complete information, consult written warranty

Low Lead Content

Intelli-Vent™ is a registered trademark of Emerson Electric Company

Residential Gas Ultra-Low NOx Power Vent Water Heaters

PROMAX®
ULTRA-LOW NOx POWER VENT

MODEL NUMBER	GALLON CAPACITY	FIRST HOUR RATING (GALLONS)	INPUT BTU PER HOUR	GPH RECOVERY 90° RISE	VENT DIAMETER	ENERGY FACTOR (EF)	DIMENSIONS					APPROX. SHIPPING WEIGHT (LBS)
							JACKET DIAMETER A	TOP OF VENT B	TOP OF HEATER C	TO T&P D	HEIGHT TO CENTER OF GAS INLET E	
GPNH-40	40	69	42,000	42.6	2 or 3	0.68	20	66-7/8	58-5/8	51-1/2	12-1/4	170
GPNH-50	50	81	42,000	42.6	2 or 3	0.68	22	65-5/8	57-7/16	51	12-1/4	207

Dimensions and specifications subject to change without notice in accordance with our policy of continuous product improvement.
All Dimensions shown in inches.
Top inlet and outlet are on 8" centers.
Operates on Natural Gas only.

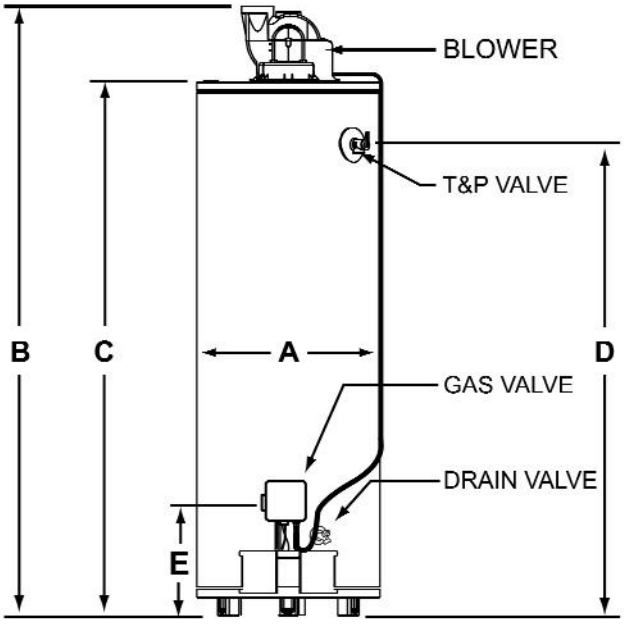

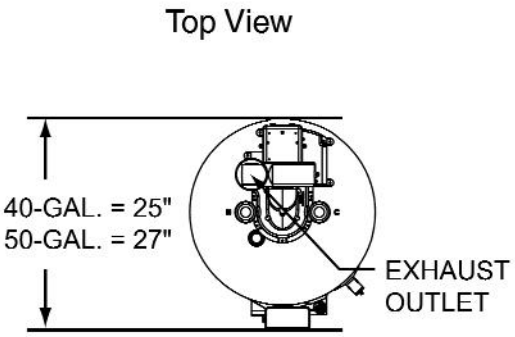

OTHER FEATURES

- 2" Foam Insulation
- Durable, Tamper-Resistant Brass Drain Valve
- 3/4" Male Water Connections
- Factory-installed Heat Traps
- Factory-installed, CSA Certified and ASME Rated T&P Relief Valve
- 1/2" Gas Connections
- Condensate Coupler Included
- 2" vent length up to 40 equivalent feet
- 3" vent length up to 120 equivalent feet