Domestic Hot Water Boilers

VF

HOT WATER SUPPLY BOILERS

VW-500 through VW-1500

FEATURES

The VF™ Boiler series delivers an exceptionally high thermal efficiency by combining an advanced modulating venturi-mixing gas/air ratio system with a vertical multi-pass copper heat exchanger for outstanding efficiency of up to 88% and low NOx emissions that meet or exceed the most stringent standards.

The VF™ Boiler is capable of firing from 100% to 25% or a 4:1 turndown ratio of rated input based on the current system demand. The VF's modulating capability is virtually limitless, and the boiler's output is based strictly on the current system demand and the required BTUs needed to maintain the desired system set point temperature.

ADVANCED HIGH EFFICIENCY, LOW NOx COMBUSTION TECHNOLOGY

- Venturi-mixing gas/air ratio system - Works with variable speed blower to precisely mix gas and air throughout firing range.
- 4:1 Turndown - Fully modulating capability prevents energy-stealing short cycling and provides smooth system operation with higher overall system efficiencies

LOW NOx OPERATION

- Complies with SCAQMD Rule 1146.2 and other Air Quality Management Districts with similar requirements for low NOx emissions

ADVANCED MODULATING CONTROL

- Includes remote tank temperature control to adjust tank temperature at the boiler - Modulates the boiler to maintain tank set point temperature within +/-1 degree
- Infinite boiler output control between 25% and 100% fire
- LED read out - Provides current boiler status in plain English with help screens to assist should a fault occur
- Controls every electrical boiler function and provides on board diagnostics
- iCOMM™ Compatible and can be monitored from remote locations. Call 1.888.WATER02 for more information.

This model is iCOMM COMPATIBLE. iCOMM For info call: 1-888-WATER02

ALL BRONZE FACTORY MOUNTED PUMP

- Integrally mounted, wired, and controlled by the boiler control
- Factory-sized for proper flow between boiler and storage tank
- Allows 50 equivalent feet of piping between boiler and tank

HIGH EFFICIENCY COPPER FIN TUBE HEAT EXCHANGER

- Vertical straight tube 2 or 4 pass heat exchanger design encircles the burner with a combustion chamber that is a 360° wall of copper fin tubes
- Rust-resistant operation - All internal heat exchanger non-copper surfaces are glasslined with A. O. Smith's proprietary porcelain glass coating, which far exceeds competitive coatings
- Impervious to thermal shock

COMPACT, LOW-PROFILE DESIGN

- Zero clearance on sides for 500-1000 models, 4 inches on sides for 1500-2000 models
- Ideal for multiple boiler installations

STANDARD VENT OR DIRECT VENT FLEXIBILITY

- Standard vent configuration, vertical or horizontal sidewall
- Two-pipe direct venting vertical and/or horizontal sidewall, with all combustion makeup air drawn from outside the building

FACTORY START-UP INCLUDED

- Required for activating warranty and assuring maximum operating performance. Contact your local sales representative or Authorized Start-Up Agent to arrange a FREE Certified Start-Up.

DESIGN CERTIFIED

CERTIFIED

ASME H

Revised May 2012

AOSDG25000

CATEGORY IV LISTED
- Requires AL29-4C gas tight rust resistant venting material

PROFESSIONAL START-UP SERVICE INCLUDED
- Assures optimum performance for each installation

MEETS THE THERMAL EFFICIENCY AND STANDBY LOSS REQUIREMENTS OF THE U. S. DEPARTMENT OF ENERGY AND CURRENT EDITION ASHRAE/ IESNA 90.1

5-YEAR HEAT EXCHANGER WARRANTY
- For complete information, consult written warranty or contact A. O. Smith

OTHER VF™ BOILER FEATURES:
- ASME 160# W.P.
- ASME RATED PRESSURE RELIEF VALVE, 125 PSI.
- FACTORY MOUNTED FLOW SWITCH
- MEETS CSD-1 CODE—FACTORY STANDARD
- BRASS DRAIN VALVE
- LOW GAS PRESSURE SWITCH
- DIGITAL INLET/OUTLET TEMPERATURE READOUT
- MANUAL RESET HI-LIMIT
- ALL BRONZE FACTORY MOUNTED PUMP

VF™ BOILER APPROVED OPTIONS:
- ❑ SEQUENCING PANEL
- ❑ ALARM BUZZER
- ❑ SIDEWALL VENT KITS
- ❑ VERTICAL AND HORIZONTAL DIRECT VENT KITS
- ❑ SKID-MOUNTED SYSTEMS
- ❑ DRY CONTACTS FOR ANY BOILER FAILURE
- ❑ LOW WATER CUTOFF
- ❑ LP GAS
- ❑ CUPRO-NICKEL HEAT EXCHANGER TUBES
- ❑ ENERGY MANAGEMENT INTERFACE ADAPTER (BacNet, Lowworks, for other contact Factory)

VERSATILE MULTI-VENTING CONFIGURATIONS

DIRECT-VENTING

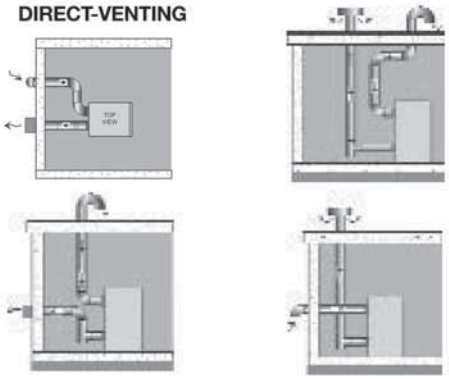

70 Equivalent Feet Exhaust
70 Equivalent Feet Intake
90 Degree Elbows = 10 Feet
45 Degree Elbows = 5 Feet
Boot Tee = 5 Feet

SIDEWALL VENTING **CONVENTIONAL VENTING**

100 Equivalent Feet Max
90 Degree Elbows = 10 Feet
45 Degree Elbows = 5 Feet
Boot Tee = 5 Feet

Please consult latest edition of the Installation Manual for detailed venting information and maximum/minimum venting distances.

Model	Input Rating BTU/Hr.	Water Flow	Temperature Rise - °F (°C)						
			40	60	80	90	100	120	140
			(22)	(33)	(44)	(90)	(56)	(67)	(78)
VW-500	500,000	GPH	1,268	845	634	563	507	423	362
		LPH	4,797	3,198	2,399	2,132	1,919	1,599	1,371
VW-750	750,000	GPH	1,901	1,268	951	845	761	634	543
		LPH	7,196	4,797	3,598	3,198	2,878	2,399	2,056
VW-1000	1,000,000	GPH	2,535	1,690	1,268	1,127	1,014	845	724
		LPH	9,595	6,397	4,797	4,264	3,838	3,198	2,741
VW-1500	1,500,000	GPH	3,780	2,520	1,890	1,680	1,512	1,260	1,080
		LPH	14,307	9,538	7,154	6,359	5,723	4,769	4,088

Note: Maximum gas supply pressure: 13.8˝ W.C. natural gas, 13.8˝ propane
Minimum gas supply pressure: 4˝ W.C. natural gas, 8˝ propane
Electrical Power: 120 Volts, 60 Hertz, 30 Amps..

For Technical Information and Automated Fax Service, call 800-527-1953. A. O. Smith Corporation reserves the right to make product changes or improvements without prior notice.

Domestic Hot Water Boilers

Model Number	Input Rating Btu/hr	Output Rating Btu/hr	20°F (11°C) Δt				30°F (17°C) Δt				Maximum Flow Rate				Minimum Flow Rate			
			GPM	LPM	ΔP FT	ΔPm	GPM	LPM	ΔP FT	ΔPm	GPM	LPM	ΔP FT	ΔPm	GPM	LPM	ΔP FT	ΔP m
VW-500	500,000	421,500	42	159	1.8	0.5	28	106	1.3	0.4	42	159	1.8	0.5	28	106	1.3	0.4
VW-750	750,000	633,750	63	238	2.9	0.9	42	159	2.1	0.6	63	238	2.9	0.9	42	159	2.1	0.6
VW-1000	1,000,000	845,000	85	322	3.9	1.2	56	212	2.8	0.9	85	322	3.9	1.2	56	212	2.8	0.9
VW-1500	1,500,000	1,260,000	126	477	13	4	84	318	7	2	126	477	13	4	84	318	7	2

Notes: Head loss shown is through boiler only and allows for no additional piping

Dimensions and Shipping Weights													
Model Number	Water Inlet/ Outlet Connections	Flue Outlet Diameter	Air Intake Diameter	Gas Inlet	A	B	C	D	E	F	G	H	Approx. Shipping Weight (Lbs.)
VW-500	2”	6”	4”	1”	56	30	37.5	22	30	31	36	45	450
VW-750	2”	6”	4”	1”	62	30	37.5	28	30	31	42	51	575
VW-1000	2”	6”	4”	1”	71	30	37.5	34	30	31	48	59	750
VW-1500	2.5”	7”	6”	1.25”	67	30.5	61	23.5	37	40	43	56.5	1275

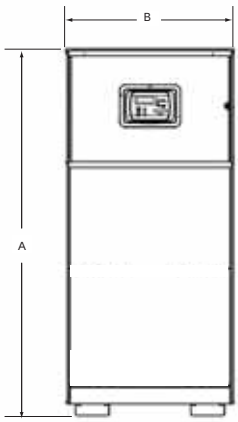

VF FRONT

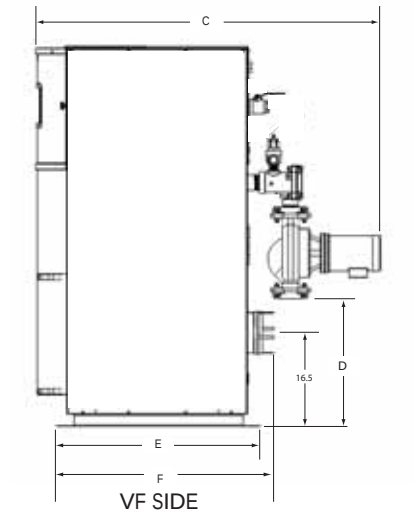

VF SIDE

VW-500 thru VW-1000

VF BACK

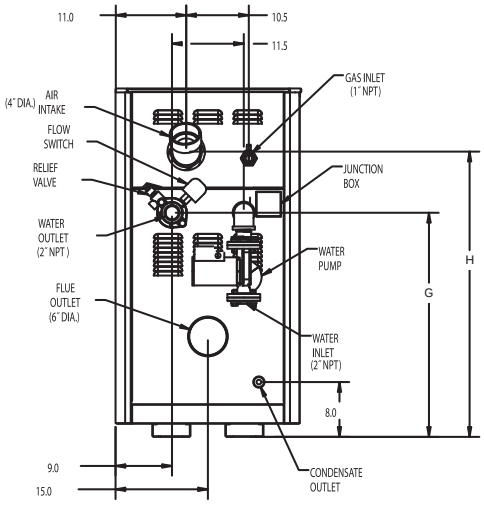

VW-1500

VF BACK

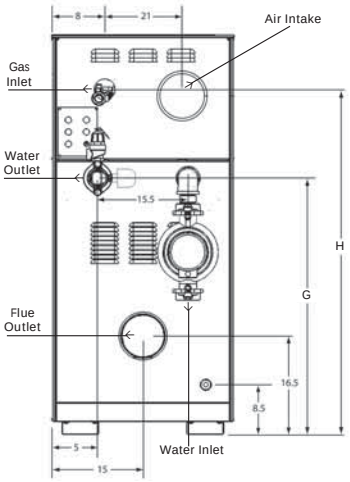

Please note this product specification sheet is intended to assist with product selection. For the most current product installation and design instructions, please see the latest edition of the Instruction Manual available at www.hotwater.com or call your local A. O. Smith Sales Representative for assistance.

For Technical Information and Automated Fax Service, call 800-527-1953. A. O. Smith Corporation reserves the right to make product changes or improvements without prior notice.

SUGGESTED SPECIFICATION

The gas-fired hot water supply boiler(s) shall be A. O. Smith VF Boiler model VW_____ having an input rating of _____ BTU/hr and capable of supplying no less than _____ GPH at a 100°F temperature rise when fired with (Natural/Propane) gas. 1) The boiler shall bear the ASME "H" stamp and shall be National Board registered (CRN in Canada) for 160 PSI working pressure. 2) The boiler(s) shall be equipped with a factory-installed 125# PSIG ASME Pressure Relief Valve. 3) The boiler(s) shall be design-tested and certified to the ANSIZ21.13 - CSA 4.9 Standards and approved by CSA International. 4) Complies with SCAQMD Rule 1146.2 and other Air Quality Management Districts with similar requirements for low NOx emmissions.The heat exchanger shall: 1) Incorporate a vertical straight tube 2 or 4 multi-pass copper fin tube heat exchanger design. 2) Be circular, encompassing the entire burner and forming the combustion chamber. 3) The tubes shall be rolled into ASME grade steel glass lined tube sheets. 4) The headers shall be ASME 160 psi welded glass lined steel. 5) For ease of service and access, headers shall be bolted and sealed to the tube sheets with silicone "O" rings, having a temperature rating of over 400°F. Tube access plugs are not acceptable. 6) To provide rust-resistant operation, all internal heat exchanger water contact surfaces shall be copper or glass lined steel. 7) The heat exchanger shall be immune to thermal shock. 8) All non-heating surface heat exchanger components (headers, tube sheets, header bolts and gaskets) shall be outside and away from the combustion and flue collection areas, only the copper fin tubes shall be exposed to the products of combustion. 9) The sealed heat exchanger flue collection system shall be constructed of stainless steel. 10) The heat exchanger shall be approved for inlet water temperatures down to 120°F. 10) The entire heat exchanger shall carry a five (5) year warranty. Boiler Pump: 1) The hot water supply boiler(s) shall be supplied with a factory sized and wired all bronze circulating pump. 2) The pump shall be interfaced with and managed by the boiler's control and cycled as needed for most efficient operation. Burner: 1)The gas burner shall be constructed of high temperature stainless steel and utilize a woven metal fiber mesh covering, be warranted for 5 years, and fire in a radial 360-degree flame pattern. 2) The burner shall be capable of infinitely modulating between 25% and 100% fire (4:1 turndown) with smooth starts and clean combustion. Boiler Controls: 1) All electrical boiler functions shall be controlled, operated, and monitored by a microprocessor-based control. 2) The microprocessor shall control and modulate the burner based on current system output requirements to maintain the boiler set point temperature and be accurate to within plus or minus 1°F. 3) The hot surface ignition system shall employ a separate flame sensor for maximum reliability. 4) The boiler control shall provide on board diagnostics with digital singular fault code read outs in plain English and help screens for additional trouble shooting assistance if needed. 5) The boiler shall be supplied with a remote tank thermistor for sensing and controlling the hot water storage tank temperature upto 1,000 feet away. 6) Provisions for connecting a remote thermistor, alarm bell, and alternate temperature controller must be provided. 7) Factory mounted and wired flow switch, blower prover, and blocked flue switches shall be provided. 8) The gastrain shall meet or exceed the requirements of ANSIZ21.13 - CSA 4.9 and include gas pressure regulator, manual gas cock, redundant safety gas valve, operating control valve, and plugged pressure test tapings. Venting: 1) The boiler shall be certified for direct horizontal through-the-wall venting or direct vertical venting; in addition to sidewall or conventional vertical venting. 2) The boiler shall be capable of horizontal sidewall or direct venting up to 70 equivalent feet without the aid of any optional sidewalll vent fans or blowers. Factory Start-Up Included-Required for activating warranty and assuring maximum operating performance. 1) The boiler shall meet the thermal efficiency and standby loss requirements of the U. S. Department of Energy and current edition ASHRAE/IESNA 90.1. 2) Boiler should incorporate the iCOMM™ system connection for remote monitoring, leak detection and fault alert.

For Technical Information and Automated Fax Service, call 800-527-1953. A. O. Smith Corporation reserves the right to make product changes or improvements without prior notice.