GAS

COMMERCIAL COPPER BOILERS
FOR HYDRONIC HEATING AND HOT WATER SUPPLY

REPLACEMENT PARTS LIST

VF MODELS VB/VW 1500/2000 SERIES 100,101

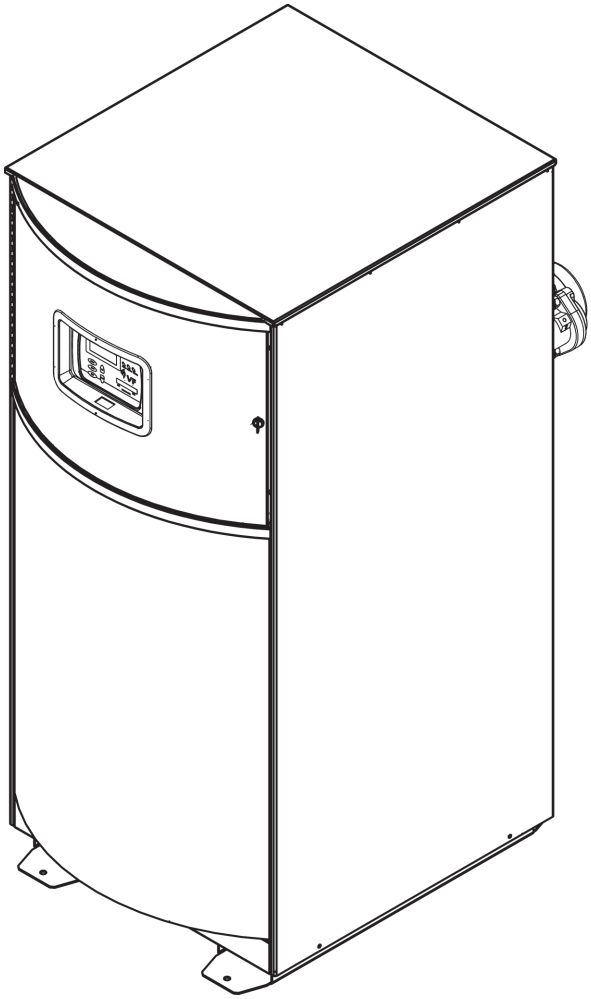

A.O. Smith Water Heater Parts Fulfillment
1-800-433-2545
www.hotwater.com

PRINTED 0810

318226-000

CONTROL ASSEMBLY

Item	Description	VB/VW 1500	VB/VW 2000
1	Control Board	9007815005	9007815005
2	PDB Board	9007310005	9007310005
3	Pump Relay	9006612005	9006612005
4	LWCO	9007337005	9007337005
5	Blocked Flue Switch	9007816015	9007817015
6	Blocked Intake Switch	9007818015	9007819015
7	Blower Prover Switch	9007242005	9007242005
8	Power-Relay	9006612005	9006612005
9	Inlet Probe	9007820015	9007820015
10	MRHL Outlet Probe	9007821015	9007821015
11	Remote Probe	9007822015	9007822015
12	Transformer	9007405005	9007405005
13	Flow Switch	9005680205	9005680205

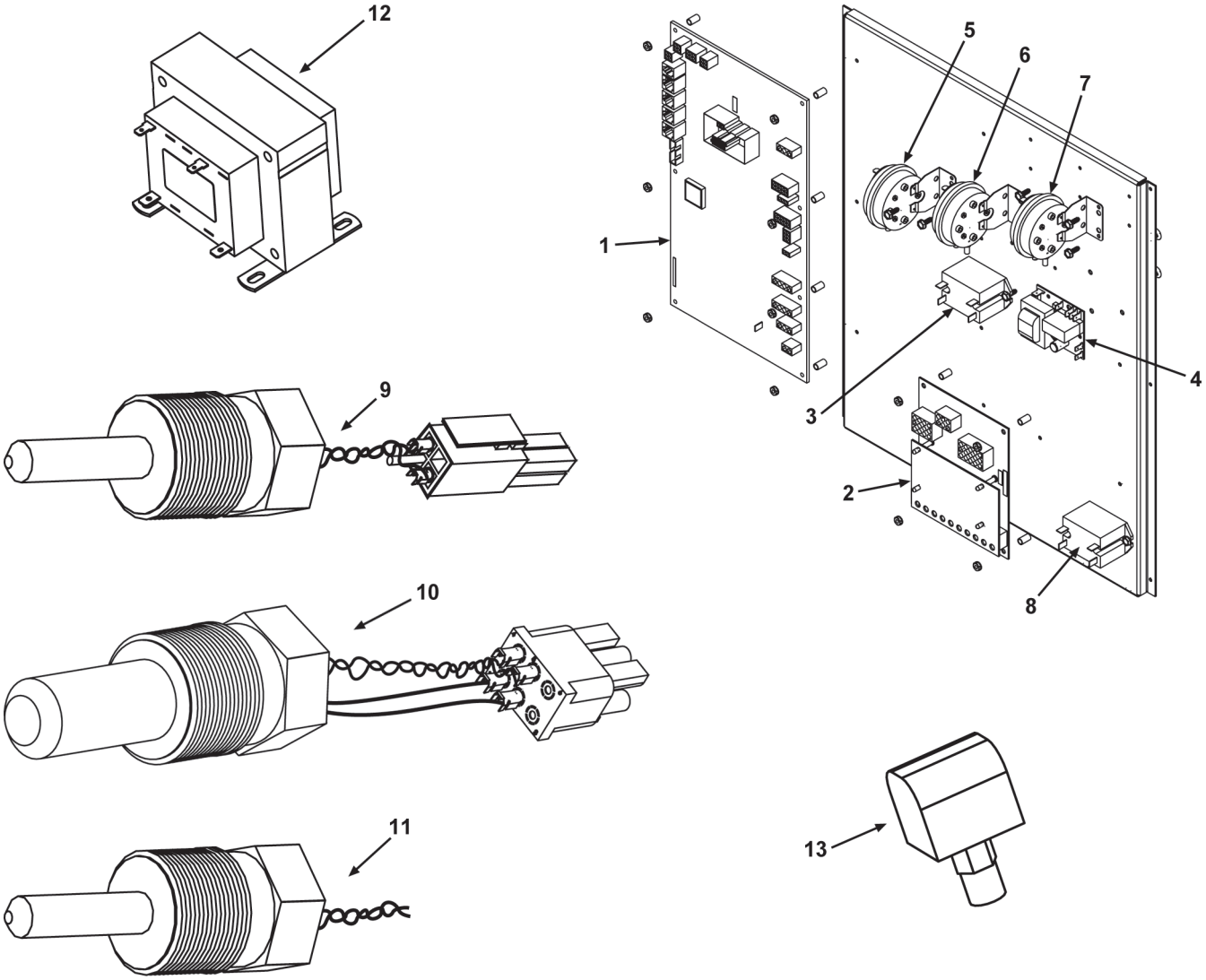

GAS AND BURNER ASSEMBLY

Item	Description	VB/VW 1500	VB/VW 2000	VB/VW 1500 Propane	VB/VW 2000 Propane
1	Blower	9007239005	9007239005	9007239005	9007239005
2	Air/Gas Venturi	212312-001	212312-001	212312-001	212312-001
3	Gas Valve	9007823005	9007823005	9007824005	9007823005
4	Low Gas Pressure Switch	9007625005	9007625005	9007396015	9007396015
5	Condensate Tray	318217-000	318217-000	318217-000	318217-000
6	Burner	9007227005	9007228005	9007227005	9007228005
7	Adapter Gasket	212344-003	212344-003	212344-003	212344-003
8	Burner Gasket	212344-002	212344-002	212344-002	212344-002
9	Ignitor	9006101205	9006101205	9006101205	9006101205
10	Flame Rod	9005892215	9005892215	9005892215	9005892215
11	Heat Exchanger Assembly	9007813005	9007814005	9007813005	9007814005
12	Blower and Condensate Tray Gaskets	212333-000	212333-000	212333-000	212333-000

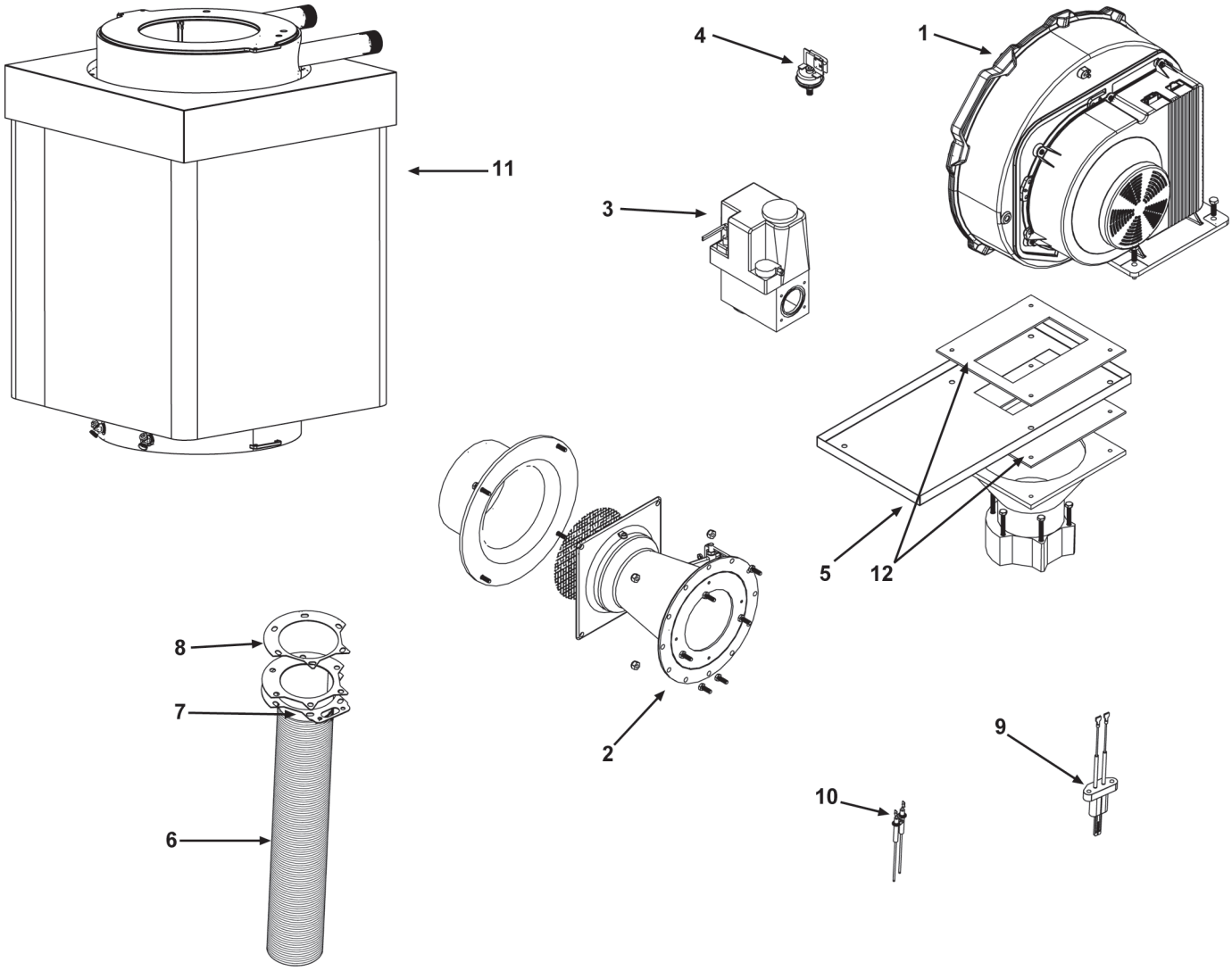

ACCESSORIES AND MISCELLANEOUS

Item	Description	VB 1500	VB 2000	VW 1500	VW 2000
1	Relief Valve	210451-002	210451-002	098883-007	098883-007
2	Inlet Terminal Assembly	9005280205	9005280205	9005280205	9005280205
3	Vertical Vent Terminal	191777-001	191777-001	191777-001	191777-001
4	Horizontal Vent Terminal	191960-001	191960-001	191960-001	191960-001
5	Boot-Tee	192034-001	191960-001	191960-001	191960-001
6	Pump Kit	317649-000	317649-000	317649-000	317649-000

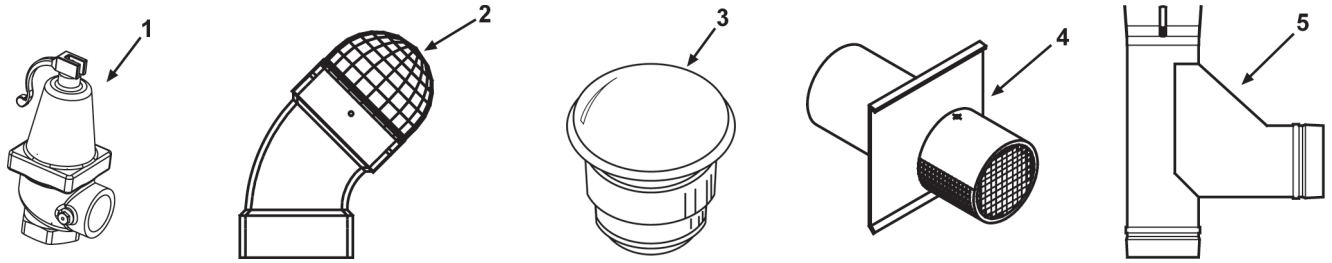

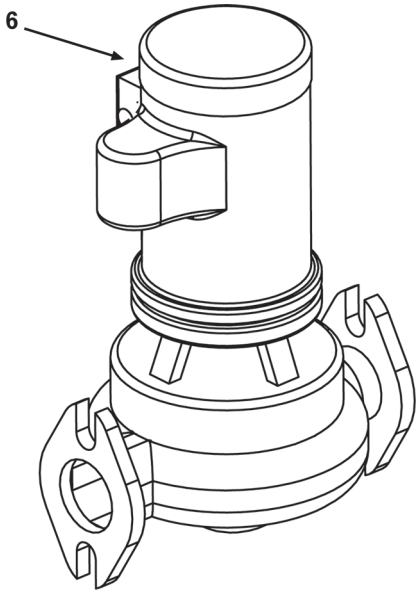

A.O. Smith Water Heater Parts Fulfillment
www.hotwater.com
1-800-433-2545
© 2010 A.O. Smith Corporation