A.O. SMITH
WATER PRODUCTS COMPANY
PSD - Alsip, Illinois

WATER HEATER BULLETIN

Date: December 20, 1999 No. 137 Rev. 2
Subject: Gas Water Heater Conversion Policy
To: All Accounts
* This supersede all previous letters and field bulletins concerning residential and commercial water heater conversion.

GAS WATER HEATER CONVERSION POLICY

All A.O. Smith Water Products Company's residential and commercial gas water heaters are designed certified by CSA or UL, under ANSI Standards for operation on one type of gas only, as indicated on the water heater's model number and rating plate.

A.O. Smith realizes that there may be certain situations where a field conversion may be necessary and in order to facilitate such a conversion, A. O. Smith complies with CSA or UL regulations ensuring that a field conversion be appropriately and safely completed.

An improper field conversion from one type of gas to another could cause potentially dangerous conditions that may cause an explosion or fire resulting in property damage, bodily injury or both.

A.O. SMITH WILL ONLY ALLOW THE CONVERSION OF GAS WATER HEATERS FROM LP GAS (PROPANE) TO NATURAL GAS. THE CONVERSION OF A GAS WATER HEATER FROM NATURAL GAS TO LP GAS (PROPANE) IS NOT ALLOWED UNDER ANY CIRCUMSTANCES.

A.O. Smith will provide kits as demand warrants through our Parts Department, phone no. 1-800-433-2545. Prices, dimensions and specifications are subject to change without notice.

Each conversion kit is to be installed by an A.O. Smith service agent or a gas utility serviceman in accordance with A.O. Smith's written instructions and all codes and requirements of the authority having jurisdiction. Failure to follow instructions could result in serious injury or property damage. The utility performing this work assumes responsibility for this conversion.

Changing the Input on Gas Water Heaters

The only changes to the input of a gas water heater allowed are:

- Adjustments to match that shown on the rating plate of the heater. The installation instructions supplied with the heater indicate if adjustments to input are a required procedure.
- Changes made as required to adjust the heater for proper operation at high altitude as determined by a qualified service technician. Service manuals include the proper procedure for adjusting heaters at high altitudes.

Conversion of Gas Water Heaters

The conversion of LP gas (Propane) to Natural gas is ONLY allowed providing:

- The conversion is done as part of a gas utility's program where propane appliances were installed anticipating the completion of natural gas service to the area. The conversion must be done under the direct supervision of the utility and by their service representatives.

Claims of damage or injury arising from the unauthorized conversion of any A.O. Smith water heater not design certified for conversion will be the complete and total responsibility of the person or entity making the conversion.

If you have any questions regarding the above policy, please contact the A.O. Smith Parts Department at 1-800-433-2545 or our Technical Information Center at 1-800-527-1953.

A.O. SMITH WATER PRODUCTS CO., INC.
5621 W. 115TH STREET • ALSIP, ILLINOIS 60803
PHONE: 1-800-433-2545
FAX: 1-800-433-2515 • www.hotwater.com

PSD-3-406

A.O. SMITH WATER PRODUCTS COMPANY

GAS

COMMERCIAL TANK TYPE WATER HEATER

REPLACEMENT PARTS LIST

MODELS BTI 120 thru 400/A:
STANDARD AND ASME (A)
SERIES 100 - NAT.
SERIES 101- L.P.

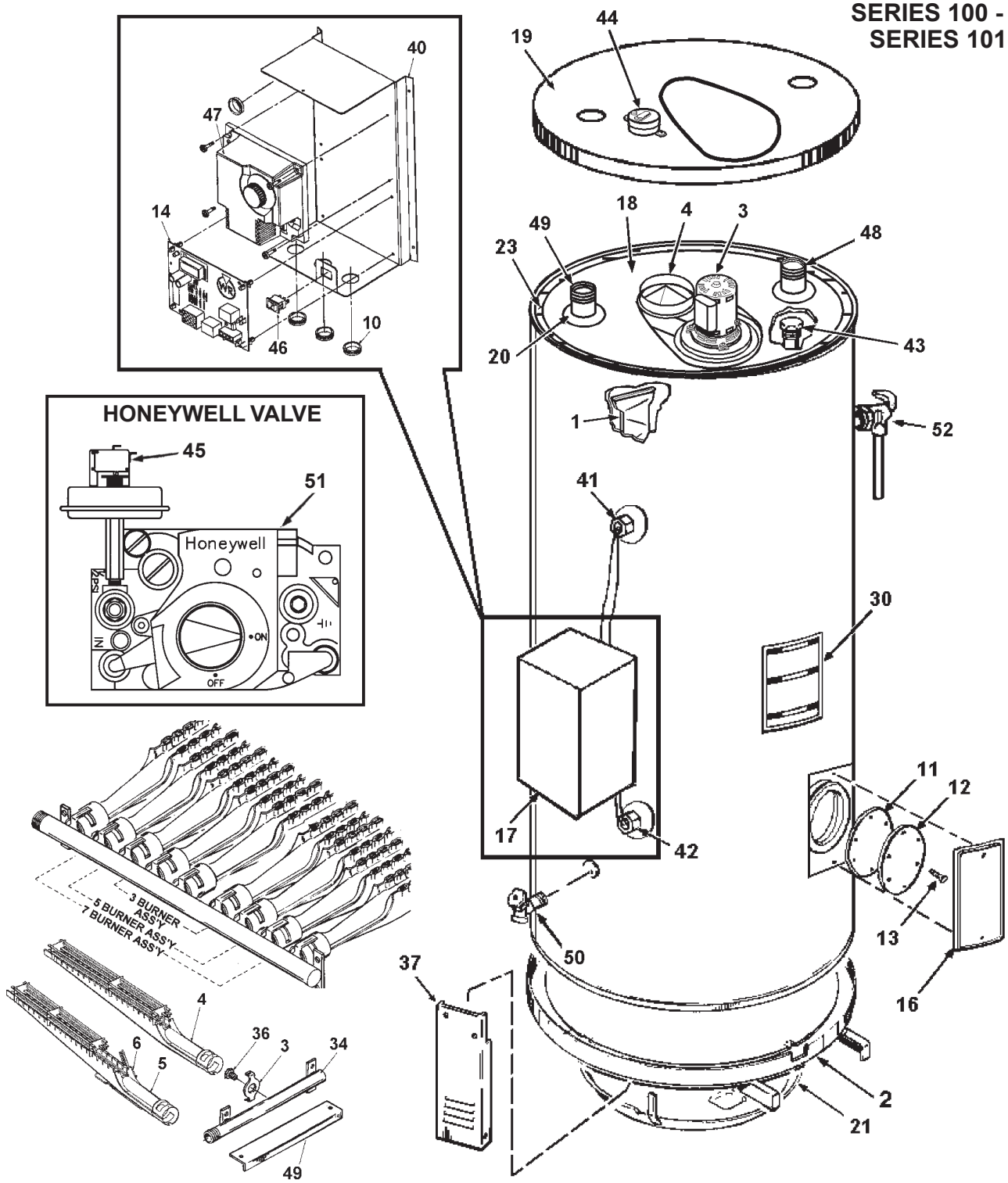

A.O. SMITH WATER PRODUCTS CO., INC.
5621 W. 115TH STREET • ALSIP, ILLINOIS 60803
PHONE: 1-800-433-2545 • FAX: 1-800-433-2515
website: www.hotwater.com/parts • email: parts@hotwater.com

PRINTED IN U.S.A. 0502

194967-000

Item	Description	BTI 120	BTI 154	BTI 180	BTI 199	BTI 200/A
1	Baffle, Flue	192199-5	194732	194732	194732	194715
2	Base, Jacket Assembly	193863	193863	194166	194166	194068
	Blower Assembly					
3	Blower	194408	194408	194408	194408	194408
4	Outlet Assembly, Exhaust	194424	194424	194424	194424	194424
5	Screw, TEK	194613	194613	194613	194613	194613
6	Burner, Orifice Bracket, Main	98044	98044	98044	98044	98044
7	Burner Orifice, Main (Nat.)	76243-32	76243-30	76243-35	76243-32	76243-32
	Burner Orifice, Main (L.P.)	76243-49	76243-46	76243-50	76243-49	76243-48
8	Burner Assembly, Main	192322	192322	192322	192322	98047
9	Burner w/Ignitor Bracket, Main	194630	194630	194630	194630	194717
10	Bushing	193404	193404	193404	193404	193404
	Cleanout Assembly					
11	Gasket	99038	99038	99038	99038	99038
12	Pressure Plate	99037	99037	99037	99037	99037
#13	Screws, Machine	69852-1(6)	69852-1(6)	69852-1(6)	69852-1(6)	69852-1(6)
14	Control, Ignition Board	194392	194392	194392	194392	194392
15	Cover, Burner	98185	98185	98185-3	98185-3	98185-3
16	Cover, Cleanout	181260	181260	181260	181260	181260
17	Cover, Control Box	194395	194395	194395	194395	194395
18	Cover, Inner	194514-4	194514-3	194514-1	194514-1	194388-3
19	Cover, Jacket	194523	194523	194523	194523	194389
20	Collar, Pipe Nipple	74060	74060	74060	74060	74060
21	Floor Shield Assembly	193864-1	193864-1	193864-1	193864-1	193984
22	Ignitor, Flame Sensor	194405	194405	194405	194405	194405
23	Insulation, Top	194439	194439	194439	194439	194439
*24	Cleanout	193914	193914	193914	193914	193914
*25	Flammable Vapors	192872	192872	192872	192872	192872
*26	Help Line	190600	190600	190600	190600	190600
*27	Instruction	170345	170345	170345	170345	170345
*28	Instruction, Bilingual	193912	193912	193912	193912	193912
*29	Instruction, ECO	192282-1	192282-1	192282-1	192282-1	192282-1
30	L&O Label	194401	194401	194401	194401	194401
*31	Master Fit	193859	193859	193859	193859	193859
*32	Relief Valve	200042	200042	200042	200042	200042
*33	Ultra Coat	193860	193860	193860	193860	193860
*34	Water Inlet	161040	161040	161040	161040	161040
*35	Water Outlet	161040-1	161040-1	161040-1	161040-1	161040-1
*36	Wiring Diagram	194400	194400	194400	194400	194400
37	Leg	194115	194115	194115	194115	194115
38	Manifold	76244	76244	76244-2	76244-2	76244-2
*39	Manual, Instruction	194780	194780	194780	194780	194780
40	Plate, Mounting	194391	194391	194391	194391	194391
41	Probe/ECO, Upper Thermostat	194396	194396	194396	194396	194396
42	Probe/Lower Thermostat	194397	194397	194397	194397	194397
43	Rod, Anode	180618-42	180618-42	180618-42	180618-42	180618-42
44	Switch, Blower/Prover	194411	194411	194411	194411	194411
45	Switch, Low Gas Pressure	191149-5	191149-5	191149-5	191149-5	191149-5
46	Switch, Off/On	193243	193243	193243	193243	193243
47	Thermostat, Digital	194393	194393	194393	194393	194393
48	Tube, Inlet	192626-1	192626-1	192626-1	192626-1	192626-1
49	Tube, Outlet	192627-1	192627-1	192627-1	192627-1	192627-1
50	Valve, Drain	26273-6	26273-6	26273-6	26273-6	26273-6
51	Valve, Gas - (Nat.)	194536-1	194536-1	194536-1	194536-1	194536-1
	Valve, Gas - (L.P.)	194536-3	194536-3	194536-3	194536-3	194536-3
52	Valve, T&P	192467	192467	192467	192467	192467
*53	Wire Harness - Control (Nat.)	194545	194545	194545	194545	194545
	Wire Harness - Control (LP)	194399	194399	194399	194399	194399
*54	Wire Harness - Power	194398	194398	194398	194398	194398

Item	Description	BTI 250/A	BTI 275/A	BTI 310/A	BTI 366/A	BTI 400/A
1	Baffle, Flue	194718	194715	194705	194705	194705
2	Base, Jacket Assembly	194068	194068	193986	193986	193986
	Blower Assembly:					
3	Blower	194408	194408	194408	194408	194408
4	Outlet Assembly, Exhaust	194424	194424	194424	194424	194424
5	Screw, TEK	194613	194613	194613	194613	194613
6	Burner, Orifice Bracket, Main	98044	98044	98044	98044	98044
7	Burner Orifice, Main (Nat.)	76243-30	76243-29	76243-35	76243-32	76243-31
	Burner Orifice, Main (L.P.)	76243-45	76243-44	76243-51	76243-49	76243-48
8	Burner Assembly, Main	98047	98047	192322	192322	192322
9	Burner w/Ignitor Bracket, Main	194717	194717	194717	194611	194611
10	Bushing	193404	193404	193404	193404	193404
	CLEANOUT Assembly:					
11	Gasket	99038	99038	99038	99038	99038
12	Pressure Plate	99037	99037	99037	99037	99037
#13	Screws, Machine	69852-1(6)	69852-1(6)	69852-1(6)	69852-1(6)	69852-1(6)
14	Control, Ignition Assembly	194392	194392	194392	194392	194392
15	Cover, Burner	98185-3	98185-3	98185-4	98185-4	98185-4
16	Cover, Cleanout	181260	181260	181260	181260	181260
17	Cover, Control Box	194395	194395	194395	194395	194395
18	Cover, Inner	194388-5	194388-5	194388-5	194388-5	194388-5
19	Cover, Jacket	194389	194389	194389	194389	194389
20	Collar, Pipe Nipple	74060	74060	74060	74060	74060
21	Floor Shield Assembly	193984	193984	193984	193984	193984
22	Ignitor, Flame Sensor	194405	194405	194405	194405	194405
23	Insulation, Top	194439	194439	194439	194439	194439
	LABELS:					
*24	Cleanout	193914	193914	193914		193914
*25	Flammable Vapors	192872	192872	192872	192872	192872
*26	Help Line	190600	190600	190600	190600	190600
*27	Instruction	170345	170345	170345	170345	170345
*28	Instruction, Bilingual	193912	193912	193912	193912	193912
*29	Instruction, ECO	192282-1	192282-1	192282-1	192282-1	192282-1
30	L&O Label	194401	194401	194401	194401	194401
*31	Master Fit	193859	193859	193859	193859	193859
*32	Relief Valve	200042	200042	200042	200042	200042
*33	Ultra Coat	193860	193860	193860	193860	193860
*34	Water Inlet	161040	161040	161040	161040	161040
*35	Water Outlet	161040-1	161040-1	161040-1	161040-1	161040-1
*36	Wiring Diagram	194400	194400	194400	194400	194400
37	Leg	194115	194115	194115	194115	194115
38	Manifold	76244-2	76244-2	76244-4	76244-4	76244-4
*39	Manual, Instruction	194780	194780	194780	194780	194780
40	Plate, Mounting	194391	194391	194391	194391	194391
41	Probe/ECO, Upper Thermostat	194396	194396	194396	194396	194396
42	Probe/Lower Thermostat	194397	194397	194397	194397	194397
43	Rod, Anode	180618-42	180618-42	180618-42	180618-42	180618-42
44	Switch, Blower Prover	194411	194411	194411	194411	194411
45	Switch, Low Gas Pressure	191149-5	191149-5	191149-5	191149-5	191149-5
46	Switch, Off/On	193243	193243	193243	193243	193243
47	Thermostat, Digital	194393	194393	194393	194393	194393
48	Tube, Inlet	192626-1	192626-1	192626-1	192626-1	192626-1
49	Tube, Outlet	192627-1	192627-1	192627-1	192627-1	192627-1
50	Valve, Drain	26273-6	26273-6	26273-6	26273-6	26273-6
51	Valve, Gas - (Nat.)	194536-1	194536-1	194536	194536	194536
	Valve, Gas - (L.P.)	194536-3	194536-3	194536-2	194536-2	194536-2
52	Valve, T&P	192467	192467	192467	192467	192467
*53	Wire Harness - Control (Nat.)	194545	194545	194545	194545	194545
	Wire Harness - Control (L.P.)	194399	194399	194399	194399	194399
*54	Wire Harness - Power	194398	194398	194398	194398	194398

*Items not illustrated. # Quantities shown in parenthesis next to part number. TBD To be determined.
Part numbers underlined are recommended stock items for emergency replacement. (Consider gas used in your area only).
Requests from PSD by giving all information such as model and series number, type of gas and specifications.

A.O. SMITH
WATER PRODUCTS
COMPANY

ProductPreservers®

A.O. SMITH WATER PRODUCTS CO., INC.
5621 W. 115TH STREET • ALSIP, ILLINOIS 60803
PHONE: 1-800-433-2545 • FAX: 1-800-433-2515
website: www.hotwater.com/parts • email: parts@hotwater.com