A.O.SMITH

CONTROL APPLICATION DIAGRAM FOR FOUR BOILERS LINEAR-TEMP* INSTALLATION HW-300 THRU HW-670 DURA-MAX 720 THRU 1810

The following control application diagram shows the routing of the electric power between the individual controls for LINEAR-TEMP* installation of four boilers.

The panel requires 120VAC, 60 Hz power. Depending upon the number of boilers, one or two 30 amp maximum capacity circuits must be provided. A fuse disconnect switch should be installed in line(s) serving panel to facilitate servicing.

THIS SCHEMATIC LAYOUT IS NOT A WIRING DIAGRAM.

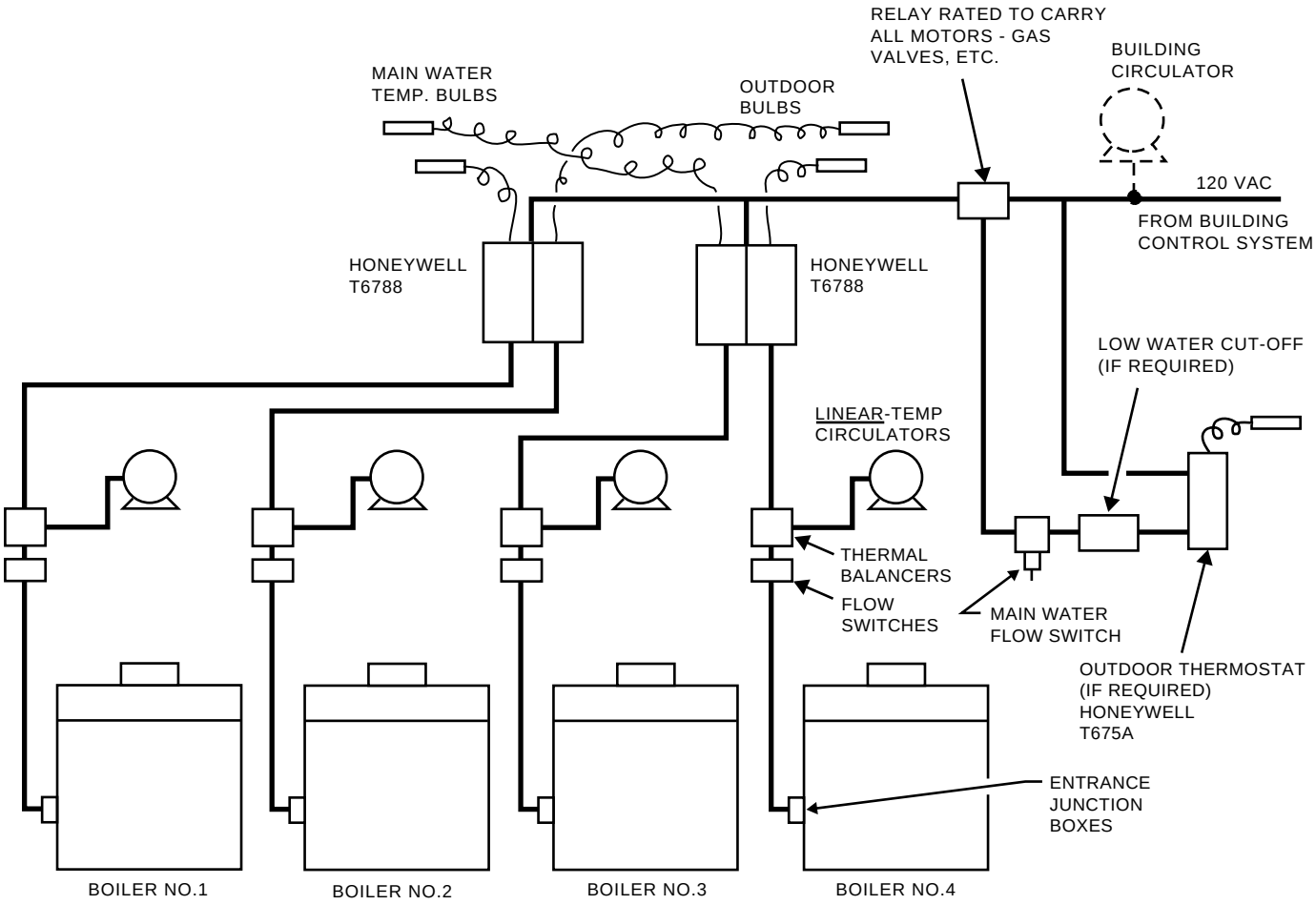

NOTE:
1. **Building temperature controls supply electric power to building circulator.**
2. **Main flow switch proves main water flow before energizing sequencing and resetting controls.**
3. **Outdoor thermostat required if building controls do not provide automatic shut-down of reset controls during warm weather.**

CONTROL APPLICATION DIAGRAM
FOUR BOILER LINEAR-TEMP INSTALLATION WITH FOUR CIRCULATORS
Boilers and secondary circulators are controlled by
Two Dual Bulb, Dual Switch Mechanical Controllers
Sequencing and Outdoor Reset of Main Water Temperature

*Trademark, A.O. Smith Corp.

© A. O. SMITH CORP. 1997