A. O. SMITH

COPPER BOILERS FOR HYDRONIC HEATING AND HOT WATER SUPPLY

- Installation
- Operation
- Maintenance
- Limited Warranty

Burkay GENESIS
A.O.Smith Space Saver Gas Boiler

Instruction Manual

GB/GW-300, 400, 500, 650, 750
SERIES 300, 301, 302, 303
2-STAGE UNITS

FM APPROVED

WARNING: If the information in this manual is not followed exactly, a fire or explosion may result causing property damage, personal injury or loss of life.

— **Do not store or use gasoline or other flammable vapors and liquids in the vicinity of this or any other appliance.**

— **WHAT TO DO IF YOU SMELL GAS:**

- **Do not try to light any appliance.**
- **Do not touch any electrical switch; do not use any phone in your building.**
- **Immediately call your gas supplier from a neighbor's phone. Follow the gas supplier's instructions.**
- **If you cannot reach your gas supplier, call the fire department.**

— **Installation and service must be performed by a qualified installer, service agency or the gas supplier.**

CAUTION

TEXT PRINTED OR OUTLINED IN RED CONTAINS INFORMATION RELATIVE TO YOUR SAFETY. PLEASE READ THOROUGHLY BEFORE INSTALLING AND USING THIS APPLIANCE.

Thank You

for buying this
cost efficient, high recovery unit
from A. O. Smith Water Products Company

Please read through this informative manual and pay special attention to the following:

ROUGH-IN DIMENSIONS/CAPACITIES PAGES 2 - 4

"FOREWORD" ON PAGE 5

"FEATURES" ON PAGES 6 - 7

"VENTING" ON PAGES 8 - 12

"GAS CONNECTIONS" 11 - 13

"INSTALLATION INSTRUCTIONS" ON PAGES 5 - 13

"WIRING DIAGRAM/SCHEMATIC" ON PAGES 14 - 15

"LIGHTING AND OPERATING" ON PAGES 19 - 20

"EMC5000 INSTRUCTIONS" ON PAGES 20 - 27

"TROUBLE SHOOTING" ON PAGES 27 - 28

"SYSTEM EQUIPMENT INSTALLATION" PAGES 29 - 33

"GENERAL MAINTENANCE" ON PAGES 34 - 35

"START-UP INSTRUCTIONS" ON PAGES 37 - 38

"LIMITED WARRANTY" ON PAGE 39

A. O. SMITH WATER PRODUCTS COMPANY

A DIVISION OF A. O. SMITH CORPORATION
www.aosmithwaterheaters.com

PLACE THESE INSTRUCTIONS ADJACENT TO BOILER AND NOTIFY OWNER TO KEEP FOR FUTURE REFERENCE.

PRINTED IN U.S.A. 0205

PART NO. 212130-000

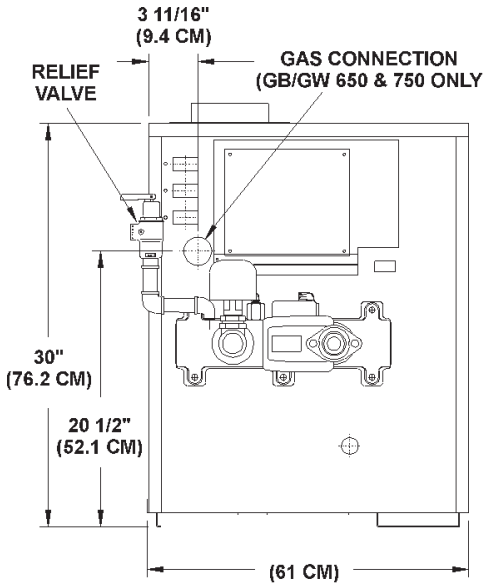

FIGURE 1.

LEFT SIDE

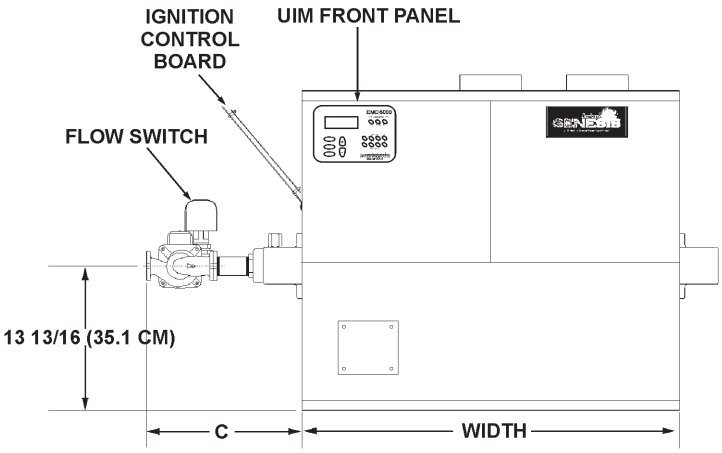

FIGURE 2.

FRONT

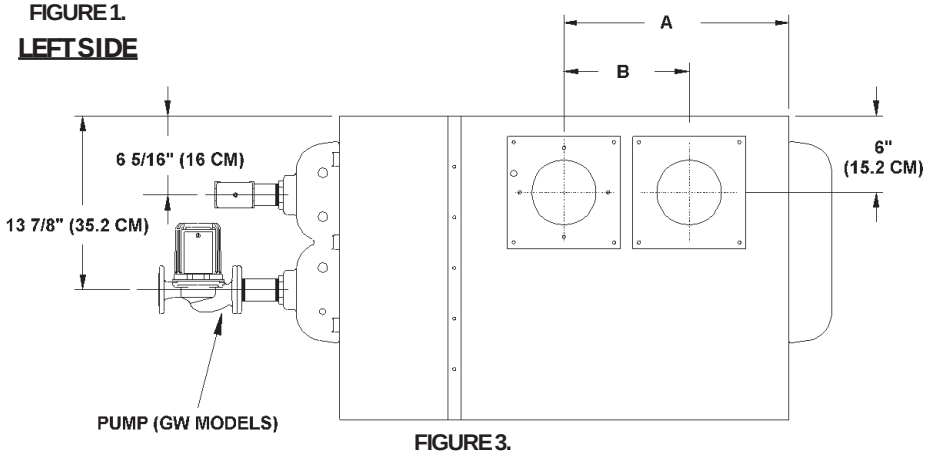

FIGURE 3.

TOP

TABLE 1A. BASIC GAS AND ELECTRICAL PARAMETERS

MODEL GB/GW	TYPE OF GAS	VOLTS/HZ	AMPS	MANIFOLD PRESS. Inches W.C.	MANIFOLD PRESS. kPa
300	Natural	120/60	20	3.5	0.87
400	Natural	120/60	20	3.5	0.87
500	Natural	120/60	20	3.5	0.87
650	Natural	120/60	20	3.5	0.87
750	Natural	120/60	20	3.5	0.87
300	Propane	120/60	20	10.0	2.49
400	Propane	120/60	20	10.0	2.49
500	Propane	120/60	20	10.0	2.49
650	Propane	120/60	20	10.0	2.49
750	Propane	120/60	20	10.0	2.49

All Models - Maximum Supply Pressure: 14 In. W. C. (03.49 kPa)
Minimum Supply Pressure Natural Gas: 4.5 In.W. C. (01.22 kPa)
Minimum Supply Pressure Propane (LP) Gas: 11.0 In. W. C. (02.74 kPa)

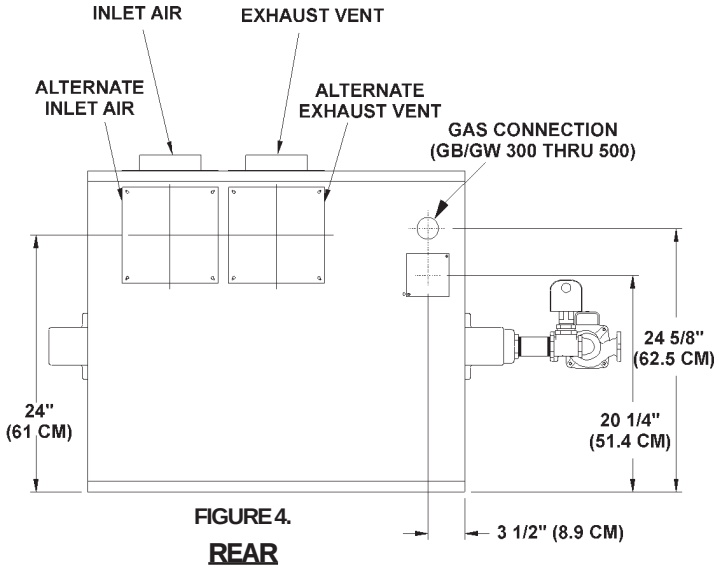

FIGURE 4.

REAR

TABLE 1B. ROUGH-IN DIMENSIONS

Model	Btu/hr. Input Natural Gas	KW Input Natural Gas	Btu/hr.Input Propane (LP) Gas	KW Input Propane (LP) Gas	Exhaust Vent Size (Inch)	Inlet Air (Inch)	Water Connections Size (Inch)	Gas Piping (Inch)	Width (Inch)	Width (mm)	A (inch)	A (mm)	B (Inch)	B (mm)	C (Inch)	C mm
GB/GW 300	300,000	88	300,000	88	5	5	1 1/2	3/4	29 1/2	749	14 13/16	376	9	229	12	305
GB/GW 400	399,900	117	399,900	117	6	6	1 1/2	1	35 3/4	908	17 15/16	456	9	229	14 3/4	375
GB/GW 500	500,000	147	500,000	147	6	6	2	1	42	1067	21 1/16	535	9	229	14 3/4	375
GB/GW 650	650,000	190	650,000	190	8	8	2	1 1/4	51 3/8	1305	25 3/4	654	9	229	14 3/4	375
GB/GW 750	750,000	220	750,000	220	8	8	2	1 1/4	57 5/8	1464	28 7/8	733	9	229	17 1/4	438

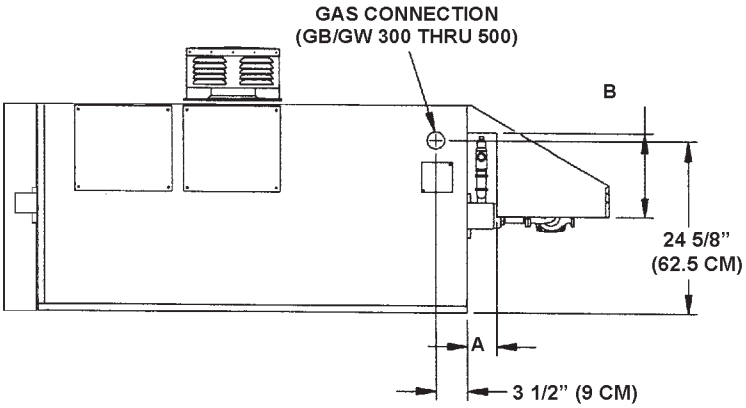

FIGURE 5.

REAR

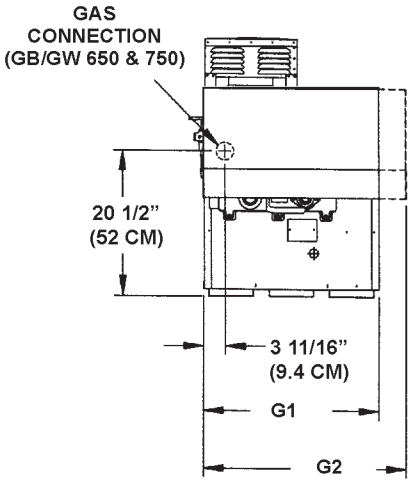

FIGURE 7.

LEFT SIDE

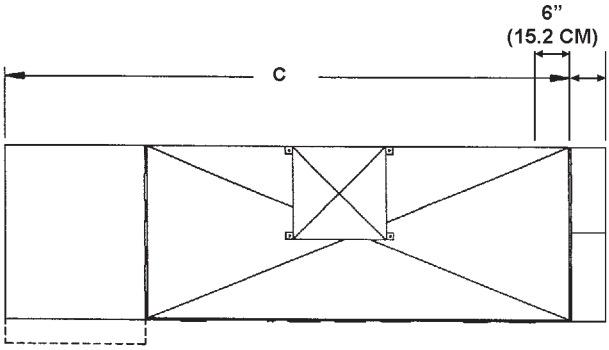

FIGURE 6.

TOP

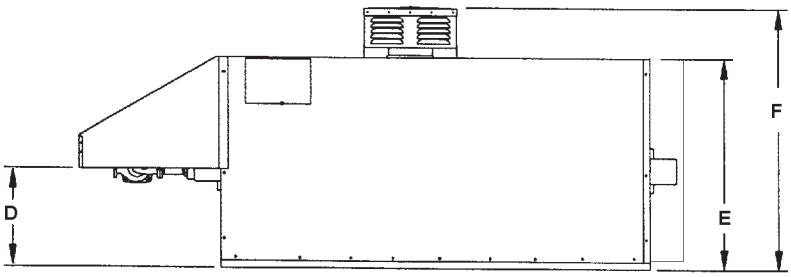

FIGURE 8.

FRONT

TABLE 1C. OUTDOOR UNIT DIMENSIONS

MODEL NUMBER	A	B	C	D	E	F	G1	G2
GBO/GWO-300	3	9 3/4	49	13 5/8	34 5/8	41 7/8	24 3/16	—
GBO/GWO-400	3	9 3/4	55 1/4	13 5/8	34 5/8	41 7/8	24 3/16	—
GBO/GWO-500	3	9 3/4	61 1/2	13 5/8	34 5/8	41 7/8	24 3/16	—
GBO/GWO-650	3	9 3/4	70 7/8	13 5/8	34 5/8	41 7/8	—	27 11/16
GBO/GWO-750	3	9 3/4	77 1/8	13 5/8	34 5/8	41 7/8	—	27 11/16

TABLE 2. PUMP PERFORMANCE

Model	Water Category	Flow Rate GPM	Flow Rate LPM	Head Loss Feet	Head Loss Meter	Rise Temp. F	Rise Temp. C	Pipe Size (Inch)	Pump Taco Models*
GW-300	Normal	17	64	4.4	1.3	30	2.4	1 1/2"	0010
	Hard	25	95	9.5	2.9	20	5.3	1 1/2"	0012
GW-400	Normal	23	87	8.0	2.4	30	4.4	1 1/2"	0012
	Hard	34	129	6.0	1.8	20	3.3	2"	0012
GW-500	Normal	28	106	4.6	1.4	30	2.6	2"	0012
	Hard	42	159	9.1	2.8	20	5.1	2"	1911 (1/4 HP)
GW-650	Normal	37	140	6.2	1.9	30	3.4	2"	0012
	Hard	55	208	12.2	3.7	20	6.8	2"	1911 (1/3 HP)
GW-750	Normal	42	159	9.7	3.0	30	5.4	2"	1911 (1/4 HP)
	Hard	63	238	18.8	5.7	20	10.4	2"	1935 (1/3 HP)

Pressure drop includes the loss through 50' (15.2M) of pipe and normal fittings, when installed with storage tank.

WATER CATEGORY	GRAIN HARDNESS PER GAL.
NORMAL	1 THROUGH 15
HARD	OVER 15

* Taco Pumps shown. Equivalent Armstrong, Bell & Gossett or Grundfos are acceptable as long as the flow rates are maintained. Always ensure adequate support for pump and piping.

TABLE 3. RECOVERY CAPACITIES

Model	Input Rating Btu/Hr (kW)	Temp. C / Rise F	22 / 40	28 / 50	33 / 60	39 / 70	44 / 80	50 / 90	56 / 100	61 / 110	67 / 120	72 / 130	78 / 140
300	(88)	LPH	2880	2304	1920	1646	1440	1280	1152	1047	960	886	823
	300,000	GPH	761	609	507	435	380	338	304	277	254	234	217
400	(117)	LPH	3839	3071	2559	2194	1920	1706	1536	1396	1280	1181	1097
	399,900	GPH	1014	811	676	580	507	451	406	369	338	312	290
500	(147)	LPH	4800	3840	3200	2743	2400	2133	1920	1745	1600	1477	1371
	500,000	GPH	1268	1015	845	725	634	564	507	461	423	390	362
650	(190)	LPH	6240	4992	4160	3566	3120	2773	2496	2269	2080	1920	1783
	650,000	GPH	1649	1319	1099	942	824	733	659	600	550	507	471
750	(220)	LPH	7200	5760	4800	4114	3600	3200	2880	2618	2400	2215	2057
	750,000	GPH	1902	1522	1268	1087	951	845	761	692	634	585	544

TABLE 4. HEAT EXCHANGER PRESSURE DROP

TEMPERATURE RISE AND PRESSURE DROP												
	20 (°F) Rise		30 (°F) Rise		40 (°F) Rise		10 (°C) Rise		15 (°C) Rise		20 (°C) Rise	
Model GB	Flow GPM	PD-Ft. Head	Flow GPM	PD-Ft. Head	Flow GPM	PD-Ft. Head	Flow LPM	PD-Meters Head	Flow LPM	PD-Meters Head	Flow LPM	PD-Meters Head
300	25	1.3	17	0.6	13	0.4	95	0.38	64	0.19	49	0.12
400	34	2.2	23	0.9	17	0.6	129	0.67	87	0.28	64	0.20
500	42	3.4	28	1.8	21	0.9	159	1.03	106	0.54	79	0.29
650	55	3.5	37	2.0	27	1.8	208	1.07	140	0.61	102	0.56
750	63	8.3	42	4.3	32	2.1	238	2.53	159	1.31	121	0.64

FOREWORD

CAUTION

TEXT PRINTED OR OUTLINED IN RED CONTAINS INFORMATION RELATIVE TO YOUR SAFETY. PLEASE READ COMPLETELY BEFORE USING APPLIANCE.

Detailed installation diagrams are in this manual. These diagrams will provide the installer with a reference of materials needed and a suggested method of piping. IT IS NECESSARY THAT ALL WATER AND GAS PIPING, AND THE ELECTRICAL WIRING BE INSTALLED AND CONNECTED AS SHOWN IN THE DIAGRAMS.

CHECK THE DIAGRAMS THOROUGHLY BEFORE STARTING INSTALLATION TO AVOID POSSIBLE ERRORS AND TO MINIMIZE TIME AND MATERIALS COST. SEE FIGURES 1 THROUGH 4 AND TABLES 1A, 1B AND 1C.

This design complies with the latest edition of the ANSI Z21.13-2000, or CSA 4.9/CSA 3.3 for Gas-Fired Low-Pressure Steam and Hot Water Boilers.

MAKE SURE THE GAS ON WHICH THE BOILER WILL OPERATE IS THE SAME AS THAT SPECIFIED ON THE BOILER RATING PLATE.

The boiler installation must conform to these instructions and the requirements of the local authority having jurisdiction.

In the absence of local code requirements, the installation must conform to the National Fuel Gas Code, ANSI Z223.1 or CAN/CSA-B149.1-00 (most recent edition).

These manuals can be purchased from the American Gas Association Laboratories, 8501 East Pleasant Valley Road, Cleveland, OH 44131 or Canadian Gas Association Laboratories, 55 Scarsdale Road, Don Mills, Ontario Canada M3B 2R3.

REPLACEMENT PARTS

Replacement parts may be ordered through A. O. Smith dealers, authorized servicers or distributors. Refer to the Yellow Pages for where to call or contact (in United States) the A. O. Smith Water Products Company, 5621 West 115th Street, Alsip, IL 60803, 1-800-433-2545 or (in Canada) A. O. Smith Enterprises Ltd., 768 Erie Street, Stratford, Ontario, Canada N5A 6T3, 800-265-8520. When ordering parts be sure to state the quantity, part number and description of the item including the complete model and serial number as it appears on the product. Refer to the parts lists for more information.

For Technical Assistance call A. O. Smith Technical Information Center at 1-800-527-1953.

WARNING

THE WATER MANIFOLD IS NOT DESIGNED TO SUPPORT THE WEIGHT OF THE WATER PIPING SYSTEM. AS ON ALL BOILER INSTALLATIONS, SPECIAL CARE MUST BE TAKEN TO ENSURE PROPER SUPPORT.

WARNING

UNDER NO CIRCUMSTANCES SHOULD THE EQUIPMENT ROOM WHERE THE BOILER IS INSTALLED EVER BE UNDER NEGATIVE PRESSURE. PARTICULAR CARE MUST BE TAKEN WHEN EXHAUST FANS, COMPRESSORS, AIR HANDLING EQUIPMENT, ETC., MAY INTERFERE WITH THE COMBUSTION AND VENTILATION AIR SUPPLIES OF THIS BOILER.

CAUTION

Label all wires prior to disconnection when servicing controls. Wiring errors can cause improper and dangerous operation of the boiler.

"Verify proper operation after servicing."

INSTALLATION CLEARANCES

Sufficient area should be provided at the front (2 feet minimum) and at the water connection side (1 foot minimum) of the unit for proper servicing. Sufficient clearance should be provided at the return header side of the boiler to permit access to heat exchanger tubes for cleaning. In a utility room installation, the door shall be wide enough to allow the boiler to enter or to permit the replacement of another appliance.

These boilers are approved for installation on noncombustible flooring in an alcove with minimum clearance to combustibles of:

3 inches sides, and back; 3 inches top, front alcove, 6 inches vent.

For installation on combustible flooring use the Combustible Floor Kit. The combustible floor kit base adds 4" to the overall height of the boiler, see Figure 9.

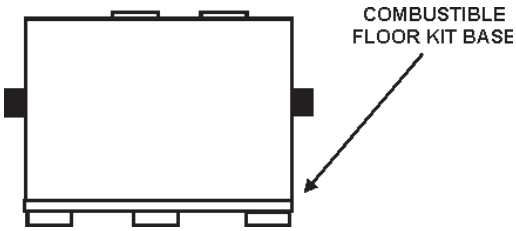

FIGURE 9. BOILER ON COMBUSTIBLE FLOOR BASE

Model	Combustible Floor Kit
(GB/GW)-300	210202-001
(GB/GW)-400	210202-002
(GB/GW)-500	210202-003
(GB/GW)-650	210202-004
(GB/GW)-750	210202-005

Two inch clearance is required from combustible construction to hot water pipes.

LEVELLING

Each unit must be checked after installation to be certain that it is level.

CONDENSATION WARNING

Your boiler is not designed to operate with a boiler inlet water temperature of less than 120°F (38°C). Colder inlet water temperatures will result in significant condensation developing on the heat exchanger. This situation can cause a corrosive environment for the heat exchanger, burners and venting resulting in premature damage, which could result in serious personal injury or death. Damage caused by excessive condensation will not be covered under the limited warranty.

For systems that use large volumes of cold water or systems utilizing heavy water draws, condensation can be prevented by using a bypass loop.

FEATURES

IMPORTANT

Only qualified personnel shall perform the initial firing of the heater. At this time the user should not hesitate to ask the start-up technician any questions regarding the operation and maintenance of the unit.

Lighting and Operating instructions are included with this manual. By using these instructions, the user may be able to make minor operational adjustments and save unnecessary service calls. However, the user should not attempt repairs, but should contact a service technician or gas supplier.

SAFETY RELIEF VALVES

Your local code authority may have other specific relief valve requirements not covered below.

WARNING

THE PURPOSE OF A SAFETY RELIEF VALVE IS TO AVOID EXCESSIVE PRESSURE WHICH MAY CAUSE TANK EXPLOSION, SYSTEM OR BOILER DAMAGE.

TO AVOID WATER DAMAGE A DRAIN LINE MUST BE CONNECTED TO A SAFETY RELIEF VALVE TO DIRECT DISCHARGE TO A SAFE LOCATION. A DRAIN LINE MUST NOT BE REDUCED FROM THE SIZE OF THE VALVE OUTLET AND IT MUST NOT CONTAIN ANY VALVES BETWEEN THE BOILER AND THE RELIEF VALVE OR THE RELIEF VALVE AND THE DRAIN EXIT. IN ADDITION, THERE SHOULD NOT BE ANY RESTRICTIONS IN A DRAIN LINE NOR SHOULD IT BE ROUTED THROUGH AREAS WHERE FREEZING CONDITIONS MIGHT OCCUR. DO NOT THREAD OR CAP THE DRAIN LINE EXIT. RESTRICTING OR BLOCKING A DRAIN LINE WILL DEFEAT THE PURPOSE OF THE RELIEF VALVE AND MAY CREATE AN UNSAFE CONDITION. INSTALL A DRAIN LINE WITH A DOWNWARD SLOPE SUCH THAT IT NATURALLY DRAINS ITSELF.

If any safety relief valve is replaced, the replacement valve must comply with the latest version of the ASME Boiler and Pressure Vessel Code, Section IV (HEATING BOILERS). Select a relief valve with a discharge rating NOT less than the boiler input, and a set pressure NOT exceeding the working pressure of any component in the system.

The storage tank temperature and pressure relief valve must comply with the applicable construction provisions of the Standard for Relief Valves and Automatic Gas Shut-off Devices for Hot Water Supply Systems, ANSI Z21 or CAN/CSA-B149.-001 (latest edition). The valve must be of the automatic reset type and not embody a single-use type fusible plug, cartridge or linkage.

FOR HOT WATER HEATING SYSTEMS, the boilers are shipped with a 50 psi pressure relief valve. This relief valve is factory installed in the water outlet header of the boiler, see Figure 1.

FOR HOT WATER SUPPLY SYSTEMS, the boilers are shipped with a 125 psi pressure relief valve. This relief valve is factory installed in the water outlet header of the boiler, see Figure 1.

This ASME-rated valve has a discharge capacity that exceeds the maximum boiler input rating and a pressure rating that does not exceed the maximum working pressure shown on the boiler rating plate.

In addition, an A.G.A. design-certified and ASME-rated temperature and pressure (T & P) relief valve must be installed on each and every water storage tank in the hot water supply system.

The T & P relief valve should have a temperature rating of 210°F, a pressure rating NOT exceeding the lowest rated working pressure of any system component, and a discharge capacity exceeding the total input of the water boilers supplying water to the storage tank.

Locate the T & P relief valve (a) in the top of the tank, or (b) in the side of the tank on a center line within the upper six (6) inches of the top of the tank, see Figure 20 and 22. The tapping shall be threaded in accordance with the latest edition of the Standard for Pipe Threads, General Purpose (inch), ANSI/ASME B1.20.1. The location of, or intended location for, the T & P relief valve shall be readily accessible for servicing or replacement.

INSTALLATION INSTRUCTIONS

REQUIRED ABILITY

INSTALLATION OR SERVICE OF THIS BOILER REQUIRES ABILITY EQUIVALENT TO THAT OF A LICENSED TRADESMAN IN THE FIELD INVOLVED. PLUMBING, AIR SUPPLY, VENTING, GAS SUPPLY AND ELECTRICAL WORK ARE REQUIRED.

LOCATION

When installing the boiler, consideration must be given to proper location. Location selected should be as close to the stack or chimney as practical with adequate air supply and as centralized with the piping system as possible. This location should also be such that the gas ignition system components are protected from water (dripping, spraying, etc.) during appliance operation and service [circulator replacement, control replacement, etc.].

- THE BOILER MUST NOT BE INSTALLED ON CARPETING.
- THE BOILER SHOULD NOT BE LOCATED IN AN AREA WHERE IT WILL BE SUBJECT TO FREEZING.
- THE BOILER SHOULD BE LOCATED NEAR A FLOOR DRAIN.
- THE BOILER SHOULD BE LOCATED IN AN AREA WHERE LEAKAGE FROM THE BOILER OR CONNECTIONS WILL NOT RESULT IN DAMAGE TO THE ADJACENT AREA OR TO LOWER FLOORS OF THE STRUCTURE.

WHEN SUCH LOCATIONS CANNOT BE AVOIDED, A SUITABLE DRAIN PAN SHOULD BE INSTALLED UNDER THE BOILER. Such pans should be fabricated with sides at least 2-1/2" deep, with length and width at least 2" greater than the dimensions of the boiler plus piping connections and must be piped to an adequate drain. The pan must not restrict combustion air flow.

WARNING

THERE IS A RISK IN USING FUEL BURNING APPLIANCES IN ROOMS OR AREAS WHERE GASOLINE, OTHER FLAMMABLE LIQUIDS OR ENGINE DRIVEN EQUIPMENT OR VEHICLES ARE STORED, OPERATED OR REPAIRED. FLAMMABLE VAPORS ARE HEAVY AND TRAVEL ALONG THE FLOOR AND MAY BE IGNITED BY THE IGNITER OR MAIN BURNER FLAMES CAUSING FIRE OR EXPLOSION. SOME LOCAL CODES PERMIT OPERATION OF GAS APPLIANCES IF INSTALLED 18 INCHES OR MORE ABOVE THE FLOOR. THIS MAY REDUCE THE RISK IF LOCATION IN SUCH AN AREA CANNOT BE AVOIDED.

FLAMMABLE ITEMS, PRESSURIZED CONTAINERS OR ANY OTHER POTENTIAL FIRE HAZARDOUS ARTICLES MUST NEVER BE PLACED ON OR ADJACENT TO THE BOILER.

OPEN CONTAINERS OF FLAMMABLE MATERIAL SHOULD NOT BE STORED OR USED IN THE SAME ROOM WITH THE BOILER.

If the boiler is installed above the level of heating system terminal units, a low water cutoff device must be installed in the boiler outlet at the time of installation.

CHEMICAL VAPOR CORROSION

Heat exchanger corrosion and component failure can be caused by the heating and breakdown of airborne chemical vapors. Spray can propellants, cleaning solvents, refrigerator and air conditioning refrigerants, swimming pool chemicals, calcium and sodium chloride, waxes, and process chemicals are typical compounds which are corrosive. These materials are corrosive at very low concentration levels with little or no odor to reveal their presence.

Products of this sort should not be stored near the boiler. Also, air which is brought in contact with the water boiler should not contain any of these chemicals. If necessary, uncontaminated air should be obtained from remote or outside sources.

MANUAL RESET HIGH TEMPERATURE LIMIT CONTROL

This device prevents the water temperature from reaching 250°F. This device is located in the outlet temperature probe.

AUTOMATIC RESET HIGH TEMPERATURE LIMIT CONTROL

CAUTION

LIMIT CONTROLS ARE NOT TO BE USED AS A THERMOSTAT.

This device prevents the outlet water temperature from reaching the setpoint. Its operation is based on the feedback from the outlet temperature probe. If the temperature exceeds the setpoint, a fault is declared and the gas is shut off. The fault condition is automatically cleared when the temperature drops below the high limit setpoint minus the high limit differential. The factory preset values (and the default high limit values) are 210°F for GW models and 230°F for GB models. The user can adjust these values between 90°F and 210°F for the GW models and 90°F and 235°F for the GB models. The factory preset value (and the default high limit differential value) for both models is 20°F. The user adjustable range is 1°F to 50°F.

TANK PROBE/INLET PROBE

FOR HOT WATER SUPPLY SYSTEMS (GW models), A tank probe is supplied with each hot water supply boiler. When a tank probe is connected to the system, the tank section on the UIM temperature screen will display a temperature instead of dashes.

"Pigtails" of field-supplied wires should be spliced to "pigtails" of tank probe and to "pigtails" at the junction box. See Figure 21 for the tank probe installation. Operating control of the system will be transferred to the tank probe when "Tank Cont" is selected on dip switch #3 off "SW1" on the CCB.

In the absence of tank probe, the inlet probe can be used for boiler stage control. Staging control will be transferred to inlet probe when "Inlet" is selected on dip switch #3 on CCB. Make sure to set the boiler pump for continuous operation.

FOR HOT WATER HEATING SYSTEMS (GB models) Due to the various types of systems and operating conditions, no factory operating control is supplied with the GB models. If no probe is attached to the system, then the dip switch on the CCB should be set to inlet control (and make sure that boiler pump is set for continuous operation). GB models require a field supplied operating control be installed in the system. Such as: loop stat, indoor/outdoor reset control, sequencing panel, or energy management system. These types of controls connect to the thermostat wires in the junction box on the boiler. **Do not operate this boiler using the internal high limits only, you must use an operating stat as mentioned above.**

CIRCULATING PUMP

The pump flow rate should not exceed the maximum recommended flow rate, see Table 2.

FOR HOT WATER SUPPLY SYSTEMS (GW models), the circulating pump is an integral part of the Boiler, see Figure 3. This pump has been lubricated at the factory, and future lubrication should be in accordance with the motor manufacturer's instructions provided as supplement to this manual.

FOR HOT WATER HEATING SYSTEMS (GB models), the circulating pump is NOT provided and must be field-installed.

SAFETY FLOW SWITCH (Supplied)

The safety flow switch is a safety device which is installed at the water outlet of the unit to prevent main burner operation in the event of inadequate water flow through the boiler.

This switch is connected to the CCB, and its status is displayed on the "System Status" screen. An asterisk indicates switch closure (water flowing).

LOW WATER CUTOFF (OPTIONAL)

If low water protection is required by the authorities having jurisdiction, a low water cutoff switch should be installed next to the boiler in the outlet water line as shown in Figure 23. To meet code requirements the power connections for this switch can be connected to the LWCO connections on the CCB, but the independent contacts for feedback should not be. They should be connected in series with the ECO. When connected in this manner, the LWCO dipswitch on the CCB should be off. The system will not recognize a low water fault condition as a LWCO fault. It will respond with an ECO fault. The switch should receive periodic (every six months) inspection to assure proper operation. A low water cutoff device of the float type should be flushed every six months. If a LWCO is desired, but not required by code, it can be connected to the LWCO connections on the CCB and the dipswitch should be turned to on. The system will then recognize a low water fault condition as LWCO fault.

DRAIN VALVE (Not Supplied)

Drain valves must be obtained and installed on each boiler and tank for draining purposes.

AIR REQUIREMENTS

WARNING

FOR SAFE OPERATION, AN AMPLE SUPPLY OF AIR MUST BE PROVIDED FOR PROPER COMBUSTION AND VENTILATION IN ACCORDANCE WITH THE NATIONAL FUEL GAS CODE, ANSI Z223.1 OR CAN/CSA-B149.1-00 (LATEST EDITIONS) OR APPLICABLE PROVISIONS OF THE LOCAL BUILDING CODES. AN INSUFFICIENT SUPPLY OF AIR MAY RESULT IN A YELLOW, LUMINOUS BURNER FLAME, CARBONING OR SOOTING OF THE FINNED HEAT EXCHANGER, OR CREATE A RISK OF ASPHYXIATION. DO NOT OBSTRUCT THE FLOW OF COMBUSTION AND VENTILATION AIR.

UNCONFINED SPACE

In buildings of conventional frame, brick or stone construction, unconfined spaces may provide adequate air for combustion.

If the unconfined space is within a building of tight construction (buildings using the following construction: weather stripping, heavy insulation, caulking, vapor barrier, etc.), air for combustion, ventilation, must be obtained from outdoors or spaces freely communicating with the outdoors. The installation instructions for confined spaces in tightly constructed buildings must be followed to ensure adequate air supply.

CONFINED SPACE

(a) U. S. INSTALLATIONS
When drawing combustion and dilution air from inside a conventionally constructed building to a confined space, such a space shall be provided with two permanent openings, ONE WITHIN 12 INCHES OF THE ENCLOSURE TOP AND ONE WITHIN 12 INCHES OF THE ENCLOSURE BOTTOM. Each opening shall have a free area of at least one square inch per 1000 Btuh of the total input of all appliances in the enclosure, but not less than 100 square inches.

If the confined space is within a building of tight construction, air for combustion, ventilation, and draft hood dilution must be obtained from outdoors. When directly communicating with the outdoors or communicating with the outdoors through vertical ducts, two permanent openings, located in the above manner, shall be provided. Each opening shall have a free area of not less than one square inch per 4000 Btuh of the total input of all appliances in the enclosure. If horizontal ducts are used, each opening shall have a free area of not less than one square inch per 2000 Btuh of the total input of all appliances in the enclosure.

(b) CANADIAN INSTALLATIONS
Ventilation of the space occupied by the boiler(s) shall be provided by an opening for ventilation air at the highest practical point communicating with outdoors. The total cross-sectional area shall be at least 10% of the area of the combustion air opening but in no case shall the cross-sectional area be less than 10 square inches (6500 mm^2).

In addition to the above, there shall be permanent air supply opening(s) having a cross-sectional area of not less than 1 square inch per 7,000 BTUH (310 mm^2/KW) up to and including 1,000,000 BTUH plus 1 square inch per 14,000 BTU in excess of 1,000,000 BTUH. This opening(s) shall be located at, or ducted to, a point neither more than 18" (450 mm) nor less than 6 inches (150 mm) above the floor level.

Where power vented equipment is used in the same room as the boiler, sufficient air openings must be supplied.

UNDERSIZED OPENINGS MAY RESULT IN INSUFFICIENT AIR FOR COMBUSTION.

Where an exhaust fan is installed in the same room with a boiler, sufficient openings for air must be provided in the walls. UNDERSIZED OPENINGS WILL CAUSE AIR TO BE DRAWN INTO THE ROOM THROUGH THE CHIMNEY, CAUSING POOR COMBUSTION. SOOTING MAY RESULT WITH AN INCREASED RISK OF ASPHYXIATION.

VENTING THE BOILER

This boiler is approved to be vented as a Category I, Category III (horizontal venting), or a Direct Vent appliance. The Horizontal and Direct Venting options require a special vent kit.

Horizontal Vent or Horizontal Direct Vent Kit	Model Number
210320-001	G(W,B) 300
210320-002	G(W,B) 400
210320-002	G(W,B) 500
210320-003	G(W,B) 650
210320-003	G(W,B) 750

Vertical Direct Vent Kit	Model Number
210317-001	G(W,B) 300
210317-002	G(W,B) 400
210317-002	G(W,B) 500
210317-003	G(W,B) 650
210317-003	G(W,B) 750

CAUTION

When venting the Genesis Boiler through oversize chimney (including masonry chimneys), additional care must be exercised to assure proper draft. For proper operation, a minimum draft of -0.02" w.c. and a maximum draft of -0.04" w.c. must be maintained. In instances of excessive draft, a barometric damper may be required to assist in maintaining the proper draft. Draft should be measured 2 feet above the boiler vent collar. The vent system must not have external runs greater than that allowed by local codes or the National Fuel Gas Code.

WARNING

THE INSTRUCTIONS IN THIS SECTION ON VENTING THE BOILER MUST BE FOLLOWED TO AVOID CHOKED COMBUSTION OR RECIRCULATION OF FLUE GASES. SUCH CONDITIONS CAUSE SOOTING OR RISKS OF FIRE AND ASPHYXIATION.

STANDARD (VERTICAL) VENTING, CATEGORY I

THIS BOILER MAY BE VENTED ACCORDING TO TABLE 5A AND 5C (ALSO SEE FIGURE 6). AT LEAST TYPE B VENTING MUST BE USED WITH THE STANDARD VENTING OPTION (thru-the-roof) USING THE NATIONAL FUEL GAS CODE VENT TABLES.* TYPE B VENT PIPE CANNOT BE USED IF THE BOILER IS VENTED HORIZONTALLY (SEE PAGES 10 AND 11). ALL LOCAL UTILITY, STATE/PROVINCIAL, REGULATIONS ON VENTING MUST BE FOLLOWED.

VENT SIZING, INSTALLATION AND TERMINATION SHALL BE IN ACCORDANCE WITH THE NATIONAL FUEL GAS CODE, ANSI Z223.1 OR CAN/CSA-B149.1-00 (LATEST EDITIONS).

VENT CONNECTION

Model Number	Vent Connector
G(W,B) 300	5"
G(W,B) 400	6"
G(W,B) 500	6"
G(W,B) 650	8"
G(W,B) 750	8"

* For vent arrangements other than Table 5A and for proper boiler operation, a barometric damper is required to maintain draft between -0.02" w.c. and -0.04" w.c at 2 feet above the boiler vent collar.

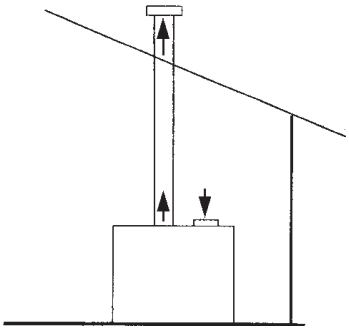

FIGURE 6. SINGLE PIPE VERTICAL TERMINATION

Vent connections must be made to an adequate stack or chimney and shall be in accordance with the National Fuel Gas Code, ANSI Z223.1 or CAN/CSA-B149.1-00 applicable provisions of the local building codes. Size and install proper size vent pipe.

Horizontal runs of vent pipe shall be securely supported by adequately placed (approximately every 4 feet), noncombustible hangers suitable for the weight and design of the materials employed to prevent sagging and to maintain a minimum upward slope of 1/4" per foot from the boiler to the vent terminals. Dampers or other obstructions must not be installed in the vent. Be sure that the vent connector does not extend beyond the inside wall of the chimney.

CONNECTING BOILER TO A COMMON VENT

CAUTION

When the GENESIS boilers are commonly vented, additional care must be exercised to assure proper draft. For proper operation, a minimum draft of -0.02" w.c. and a maximum draft of -0.04" w.c. must be maintained AT EACH INDIVIDUAL BOILER. In instances of excessive draft, a barometric damper may be required to assist in maintaining the proper draft. Draft should be measured 2 feet above EACH boiler vent collar.

Do not connect the boiler to a common vent or chimney with solid fuel burning equipment. This practice is prohibited by most local building codes as is the practice of venting gas fired equipment to the duct work of ventilation systems.

Where a separate vent connection is not available and the vent pipe from the boiler must be connected to a common vent with an oil burning furnace, the vent pipe should enter the common vent or chimney at a point ABOVE the flue pipe from the oil furnace.

UL/ULC listed double wall type B-1 gas vents, through 8" diameter, can be installed in heated and unheated areas and can pass through floors, ceilings, partitions, walls and roofs, provided the required clearance is observed.

At the time of removal of an existing boiler, the following steps shall be followed with each appliance remaining connected to the common venting system. Perform these steps while the other appliances remaining connected to the common venting system are not in operation.

Seal any unused openings in the common venting system.

Visually inspect the venting system for proper size and horizontal pitch and determine there is not blockage or restriction, leakage, corrosion and other deficiencies which could cause an unsafe condition.

All boiler venting systems shall be installed in accordance with the National Fuel Gas Code, ANSI Z223.1 or CAN/CSA-B149.1-00 (latest version), or applicable provisions of the local building codes.

SINGLE PIPE HORIZONTAL VENTING

Vent sizing, installation and termination shall be in accordance with the NATIONAL FUEL GAS CODE, ANSI Z223.1 OR CAN/CSA-B149.1-00 If applicable, all local, utility, state/provincial regulations on venting must be followed. This boiler may be vented according to Table 5A and 5C (also, see Figure 7). The exhaust vent pipe must be "Saf-T-Vent" manufactured by Heat-Fab Inc. The exhaust vent material type is AL 29-4C. This vent system must be 100% sealed with a condensate trap located as close to the boiler as possible.

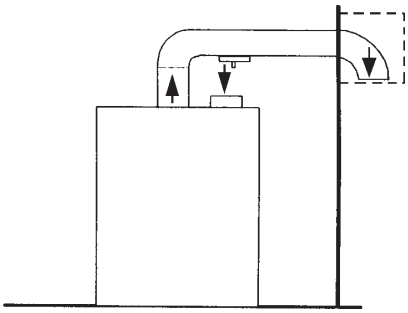

FIGURE 7. SINGLE PIPE HORIZONTAL TERMINATION

TABLE 5A. SINGLE PIPE HORIZONTAL AND VERTICAL VENTING

MODEL	EXHAUST VENT*
GB/GW-300	110'
GB/GW-400	50'
GB/GW-500	50'
GB/GW-650	50'
GB/GW-750	50'

* When sizing exhaust piping and intake air piping, 90-degree elbows are equivalent to 5 feet of straight pipe and 45-degree elbows are equal to 3 feet of straight pipe.

Intake/Exhaust Installation Requirements, see Figures 6, 7 and 14):

1. The termination must be a minimum of 12 inches above anticipated snow or grade level whichever is higher.
2. Due to normal formation of water vapor in the combustion process, horizontal terminations must not be located over areas of pedestrian or vehicular traffic, (e.g., public walkways or over areas where condensate could create a nuisance or hazard. This is especially true in colder climates where ice buildup is likely to occur. A.O. Smith Corporation will not be held liable for any personal injury or property damage due to any dislodging of ice.
3. The minimum distance from the exhaust terminal to any window, gravity air inlet to a building, or from gas or electric meter(s) is 6 feet horizontally, 4 feet below and 2 feet above.
4. The minimum distance from the exhaust terminal to an inside corner formed by two exterior walls is 6 feet but 10 feet is recommended where possible.
5. Maintain a minimum distance of 4 feet from any soffit or eave vent to the exhaust terminal.
6. Maintain a minimum distance of 10 feet from any forced air inlet to a building. Any fresh air or make up air inlet such as a dryer or furnace area is considered to be a forced air inlet.
7. Avoid areas where condensate drainage may cause problems such as above planters, patios, or adjacent to windows where the steam from the flue gases may cause fogging.

8. Select the point of wall penetration where the minimum 1/4" per foot of slope up can be maintained.
9. The through the wall termination kit is suitable for zero clearance to combustible materials.
10. The mid point of the exhaust and intake air termination elbows must be a minimum of 12 inches from the exterior wall.

DIRECT VENT HORIZONTAL AND VERTICAL VENTING

Vent sizing, installation and termination shall be in accordance with the NATIONAL FUEL GAS CODE, ANSI Z223.1 OR CAN/CSA-B149.1-00 (LATEST EDITIONS). If applicable, all local, utility, state/provincial regulations on venting must be followed. This boiler may be vented according to Table 5B and 5C (also, see Figures 8, 9, 10 and 11). The exhaust vent pipe must be "Saf-T-Vent" manufactured by Heat-Fab Inc. The exhaust vent material type is AL 29-4C. This vent system must be 100% sealed with a condensate trap located as close to the boiler as possible.

The intake air piping can be PVC, CPVC, ABS or any suitable intake air piping that can be sealed.

TABLE 5B. DIRECT VENT HORIZONTAL AND VERTICAL VENTING

MODEL	INTAKE*	EXHAUST*
GB/GW-300	60'	60'
GB/GW-400	35'	35'
GB/GW-500	35'	35'
GB/GW-650	35'	35'
GB/GW-750	35'	35'

* When sizing exhaust piping and intake air piping, 90-degree elbows are equivalent to 5 feet of straight pipe and 45-degree elbows are equal to 3 feet of straight pipe.

Intake/Exhaust Installation Requirements, (see Figures 8, 9, 10, 11 and 14):

1. The exhaust and intake air termination must be a minimum of 12 inches above anticipated snow or grade level which ever is higher, see Figure 14.
2. Due to normal formation of water vapor in the combustion process, horizontal terminations must not be located over areas of pedestrian or vehicular traffic, (e.g. public walkways or over areas where condensate could create a nuisance or hazard). This is especially true in colder climates where ice buildup is likely to occur. A.O. Smith Corporation will not be held liable for any personal injury or property damage due to any dislodging of ice.
3. The minimum distance from the exhaust terminal to any window, gravity air inlet to a building, or from gas or electric meter(s) is 6 feet horizontally, 4 feet below and 2 feet above.
4. The minimum distance from the exhaust terminal to an inside corner formed by two exterior walls is 6 feet but 10 feet is recommended where possible.
5. Maintain a minimum distance of 4 feet from any soffit or eave vent to the exhaust terminal.
6. Maintain a minimum distance of 10 feet from any forced air inlet to a building. Any fresh air or make up air inlet such as a dryer or furnace area is considered to be a forced air inlet.
7. Avoid areas where condensate drainage may cause problems such as above planters, patios, or adjacent to windows where the steam from the flue gases may cause fogging.
8. Select the point of wall penetration where the minimum 1/4" per foot of slope up can be maintained.
9. The through the wall termination kit is suitable for zero clearance to combustible materials.
10. The mid point of the exhaust and intake air termination elbows must be a minimum of 12 inches from the exterior wall.

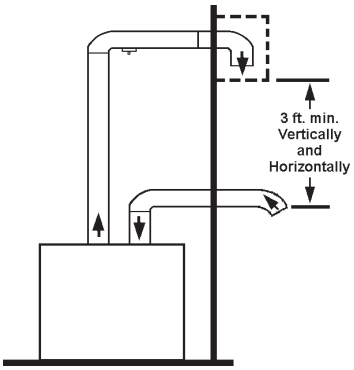

⚠ CAUTION
Direct venting into dead air spaces such as alleys, atriums and inside corners can cause recirculation of flue gases. Recirculation of flue gases will cause sooting, premature failure of the heat exchanger and icing of the combustion air intake during severe cold weather. To prevent the recirculation of flue gases, maintain as much distance as possible between the combustion air intake and the exhaust vent terminal.

FIGURE 8. DIRECT VENT HORIZONTAL TERMINATION AND MINIMUM CLEARANCES

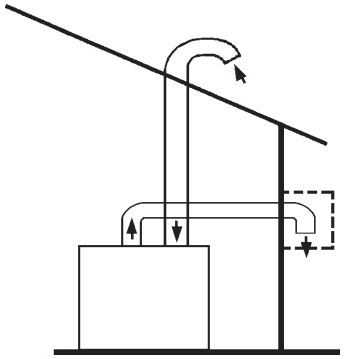

FIGURE 9. DIRECT VENT HORIZONTAL/VERTICAL TERMINATION

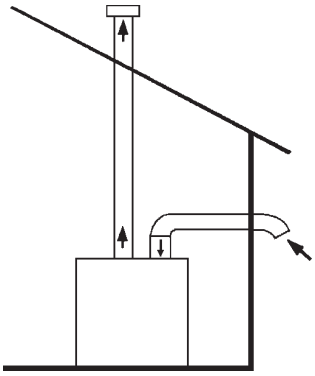

FIGURE 10. DIRECT VENT VERTICAL/HORIZONTAL TERMINATION

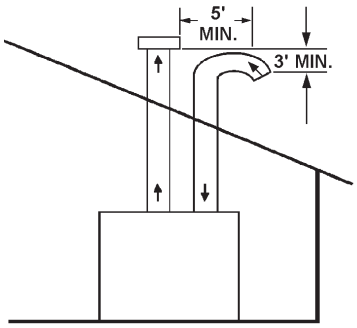

FIGURE 11. DIRECT VENT VERTICAL TERMINATION AND MINIMUM CLEARANCES

TABLE 5C. INTAKE/VENTING CONFIGURATIONS, CATEGORIES AND MATERIALS

Source for Combustion Air Supply	Exhaust Venting Configuration	Venting Category	Approved Venting Material Required	Combustion Air Intake Material
Boiler Room Air (Using combustion air from within the building.)	Vertical Natural Draft	Category I	Type B Vent Pipe* (Requires a single-acting, listed barometric damper if vent length exceeds Table 5A.)	None Required
	Horizontal/Sidewall Venting	Category III	AL29-4C Stainless Steel Vent Pipe**	None Required
Direct Venting (Outside combustion air thru sealed pipe to boiler intake.)	Vertical Direct Venting	Category I	AL29-4C Stainless Steel Vent Pipe**	PVC, ABS, CPVC**
	Horizontal Direct Venting	Category III	AL29-4C Stainless Steel Vent Pipe** or type B Vent Pipe*	PVC, ABS, CPVC**
Ducted Air* ** (Using combustion air from outside the building ducted to boiler intake.)	Vertical Natural Draft	Category I	Type B Vent Pipe* (Requires a single-acting, listed barometric damper if vent length exceeds Table 5A.)	PVC, ABS, CPVC, Galvanized Metal Duct Pipe**

NOTES: * A standard list type B vent terminal as supplied by the vent pipe manufacturer may be used.
** Vent cap/vent terminations and combustion air intake terminations must be furnished by the boiler manufacturer in accordance with AGA/CSA requirements. No substitutions; unapproved substitutions may/will result in dangerous conditions, nuisance lockouts during windy conditions and premature boiler failure.
*** Cannot be used in rooms with negative pressure.

FLUE BOX INSTALLATION

This boiler can be vented and/or bring in fresh air through the rear of the cabinet with the use of the FLUE BOX and vent adaptor. Any of the previous venting configurations can be installed with rear connections.

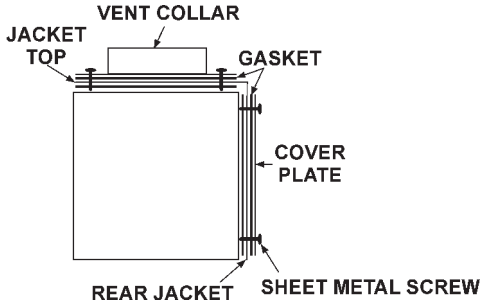

FIGURE 12. STANDARD INSTALLATION

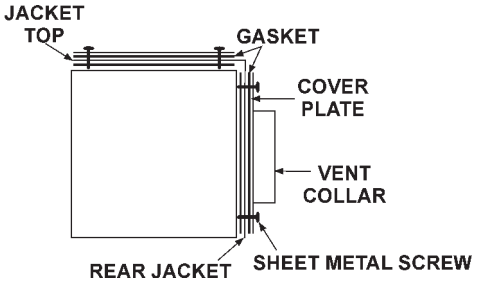

FIGURE 13. REAR VENT INSTALLATION

To change the unit to rear exhaust:

1. **REFER TO THE PSD PARTS LIST, PART NO. 212131-000, AND ORDER THE "FLUE BOX INSULATION" (211909-007 FOR THE -300 MODEL; 211909-008 FOR THE 400 & 500 MODEL/ 211909-009 FOR THE 650 & 750 MODEL). THIS PART MUST BE IN HAND BEFORE PROCEEDING TO STEP 2.**
2. Remove the vent collar, vent collar gasket, jacket top (from the top) and remove the cover plate and cover plate gasket (from the rear).
3. Remove as thoroughly as possible the fluebox insulation on top of the fluebox. REPLACE this part by applying high-temperature spray adhesive on the newly ordered part and adhering to the top of the fluebox.
4. Reinstall the jacket top and attach the cover plate (along with its gasket).
5. CAREFULLY cut the exhaust hole through the exposed fluebox insulation on the back of the fluebox. Dispose of the cut round piece of insulation.
6. Place the vent collar in alignment with the newly-cut exhaust hole and drill screw holes through the fluebox, using the vent collar as a template. Secure in place (along with its gasket) with the existing sheet metal screws.

To change the unit to rear intake air:

1. The vent collar (for intake air) and the cover plate (for intake air) must be switched. Insure all sheet metal screws are back in place.

GAS CONNECTIONS

WARNING

THIS BOILER IS NOT INTENDED TO OPERATE AT GAS SUPPLY PRESSURE OTHER THAN SHOWN ON THE RATING PLATE. A LOCK-UP OR POSITIVE SHUT-OFF TYPE REGULATOR MUST BE INSTALLED IN THE GAS SUPPLY LINE. EXPOSURE TO HIGHER GAS SUPPLY PRESSURE MAY CAUSE DAMAGE TO GAS VALVES WHICH CAN RESULT IN FIRE OR EXPLOSION. IF OVERPRESSURE HAS OCCURRED SUCH AS THROUGH IMPROPER TESTING OF GAS LINES OR EMERGENCY MALFUNCTION OF THE SUPPLY SYSTEM, THE GAS VALVES MUST BE CHECKED FOR SAFE OPERATION. MAKE SURE THAT THE OUTSIDE VENTS ON THE SUPPLY REGULATORS AND THE SAFETY VENT VALVES ARE PROTECTED AGAINST BLOCKAGE. THESE ARE PARTS OF THE GAS SUPPLY SYSTEM, NOT THE BOILER. VENT BLOCKAGE MAY OCCUR DURING ICE BUILD-UP OR SNOW STORMS.

WHEN LOCAL CODES REQUIRE A MAIN MANUAL SHUT-OFF VALVE OUTSIDE THE BOILER JACKET, A SUITABLE MAIN MANUAL SHUT-OFF VALVE MUST BE INSTALLED IN A LOCATION COMPLYING WITH THOSE CODES.

IT IS IMPORTANT TO GUARD AGAINST GAS VALVE FOULING FROM CONTAMINANTS IN THE GAS WAYS. SUCH FOULING MAY CAUSE IMPROPER OPERATION, FIRE OR EXPLOSION. IF COPPER SUPPLY LINES ARE USED THEY MUST BE APPROVED FOR GAS SERVICE.

BEFORE ATTACHING THE GAS LINE BE SURE THAT ALL GAS PIPE IS CLEAN ON THE INSIDE.

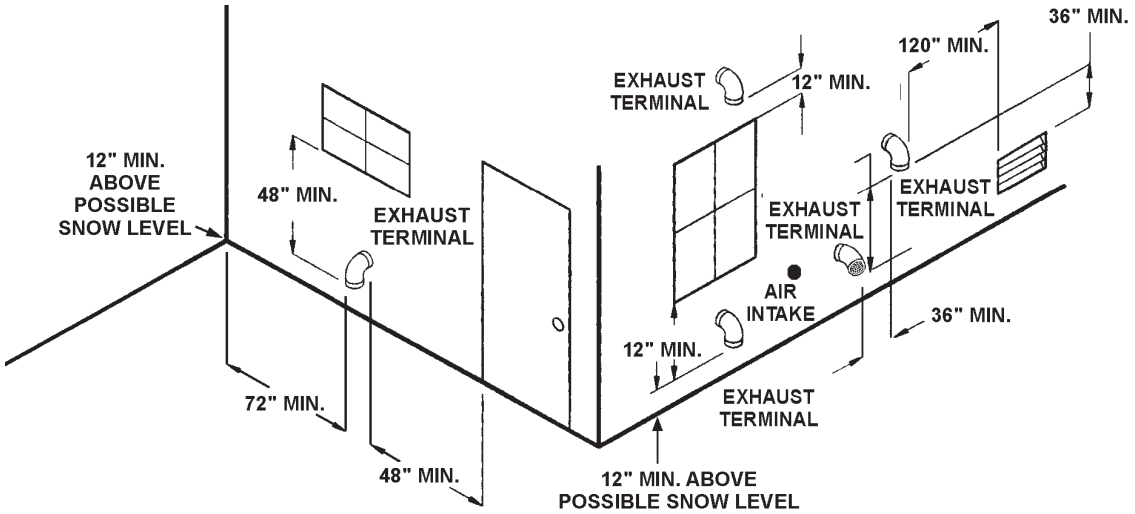

FIGURE 14. VENT TERMINATIONS AND INSTALLATION CLEARANCES

TABLE 6. SINGLE UNIT INSTALLATION, SUGGESTED PIPE SIZE

	Maximum Equivalent Pipe Length Natural Gas 1,000 BTU/FT³ 0.60 Specific Gravity @ 0.5 In. W.C. Pressure Drop Propane Gas 2,500 BTU/FT³ 1.53 Specific Gravity @ 0.60 In.W.C. Pressure Drop											
BTUH	3/4"		1"		1 1/4"		1 1/2"		2"		2 1/2"	
Input	N	P	N	P	N	P	N	P	N	P	N	P
300,000	15	25	35	85	150	380	360	-	-	-	-	-
399,900	-	15	25	60	100	260	250	-	-	-	-	-
500,000	-	10	15	35	65	150	130	360	500	-	-	-
650,000	-	-	10	25	45	100	95	250	340	-	-	-
750,000	-	-	-	20	35	80	75	180	260	600	-	-

TO TRAP ANY DIRT OR FOREIGN MATERIAL IN THE GAS SUPPLY LINE, A DIRT LEG (SOMETIMES CALLED DRIP LEG) MUST BE INCORPORATED IN THE PIPING. The dirt leg must be readily accessible and not subject to freezing conditions. INSTALL IN ACCORDANCE WITH RECOMMENDATIONS OF SERVING GAS SUPPLIERS. REFER TO NATIONAL FUEL GAS CODE, ANSI Z223.1 OR CAN/CSA-B149.1-00 (MOST RECENT EDITION).

To prevent damage, care must be taken not to apply too much torque when attaching gas supply pipe to gas valve gas inlet.

Fittings and unions in the gas line must be metal to metal type.

Apply joint compounds (pipe dope) sparingly and only to the male threads of pipe joints. Do not apply compound to the first two threads. Use compounds resistant to the action of liquefied petroleum gases.

THE BOILER MUST BE ISOLATED FROM THE GAS SUPPLY PIPING SYSTEM BY CLOSING ITS MAIN MANUAL GAS SHUTOFF VALVE DURING ANY PRESSURE TESTING OF THE GAS SUPPLY PIPING SYSTEM AT TEST PRESSURES EQUAL TO OR MORE THAN 1/2 PSIG.

PURGING

Gas line purging is required with new piping or systems in which air has entered.

⚠ CAUTION

PURGING SHOULD BE PERFORMED BY PERSONS EXPERIENCED IN THIS TYPE OF GAS SERVICE TO AVOID RISK OF FIRE OR EXPLOSION. PURGE DISCHARGE MUST NOT ENTER CONFINED AREAS OR SPACES WHERE IGNITION CAN OCCUR. THE AREA MUST BE WELL VENTILATED AND ALL SOURCES OF IGNITION MUST BE DEACTIVATED OR REMOVED.

BEFORE PLACING THE BOILER IN OPERATION, CHECK FOR GAS LEAKAGE. Use soap and water solution or other material acceptable for the purpose in locating gas leaks. DO NOT USE MATCHES, CANDLES, FLAME OR OTHER SOURCES OF IGNITION FOR THIS PURPOSE.

1. CORRECT GAS

Make sure the gas on which the boiler will operate is the same as that specified on the boiler rating plate. Do not install the boiler if equipped for a different type gas, consult your gas supplier.

2A. SIZING GAS SUPPLY LINE, (for single boiler installations), see Table 6.
2B. SIZING GAS SUPPLY LINE, (for multiple installations of two or more boilers), see Table 7.

Use Table 7, which is taken from ANSI booklet Z223.1, NATIONAL FUEL GAS CODE, or CAN/CSA-B149.1-00 (most recent edition) to size iron pipe or equivalent gas supply line. Table 7 is based on a pressure drop of 0.5 inches of water and a specific gravity of 0.60 approximately that of natural gas. (LP gas has an S.G. of about 1.53).

Capacities in cubic feet per hour of 0.60 specific gravity gas for different sizes and lengths of pipe are shown in Table 7. No additional allowance is necessary for an ordinary number of fittings.

Where it is necessary to use more than the average number of pipe fittings (e.g., elbows, tees, and valves in gas supply line), use a pipe size larger than specified to compensate for increased pressure drop.

TABLE 7. SUGGESTED PIPE SIZE FOR MULTIPLE GAS APPLIANCES

Nominal Iron Pipe Size in Inches	Maximum Capacity of Pipe in Cubic Feet of Gas per Hour for Gas Pressures of 14 in. W.C. (0.5 psi) or Less and a Pressure Drop of 0.5 in W.C. based on a 0.60 Specific Gravity Gas													
	Length of Pipe (Feet)													
	10	20	30	40	50	60	70	80	90	100	125	150	175	200
1	680	465	375	320	285	260	240	220	205	195	175	160	145	135
1 1/4	1,400	950	770	660	580	530	490	460	430	400	360	325	300	280
1 1/2	2,100	1,460	1,180	990	900	810	750	690	650	620	550	500	460	430
2	3,950	2,750	2,200	1,900	1,680	1,520	1,400	1,300	1,220	1,150	1,020	950	850	800
2 1/2	6,300	4,350	3,520	3,000	2,650	2,400	2,250	2,050	1,950	1,850	1,650	1,500	1,370	1,280
3	11,000	7,700	6,250	5,300	4,750	4,300	3,900	3,700	3,450	3,250	2,950	2,650	2,450	2,280
4	23,000	15,800	12,800	10,900	9,700	8,800	8,100	7,500	7,200	6,700	6,000	5,500	5,000	4,600

TABLE 8. MULTIPLIER TABLE

Specific Gravity	Multiplier	Specific Gravity	Multiplier
0.55	1.04	1.00	0.78
0.60 (natural)	1.00	1.10	0.74
0.65	0.96	1.20	0.71
0.70	0.93	1.30	0.68
0.75	0.90	1.40	0.66
0.80	0.87	1.50 (Propane)	0.63
0.85	0.84	1.60	0.61
0.90	0.82	1.70	0.59

Applications of the gravity factor converts the figures given in Table 7 to capacities with another gas of different specific gravity. Such application is accomplished by multiplying the capacities given in Table 7 by the multipliers shown in Table 8.

HIGH ALTITUDE INSTALLATIONS

WARNING

INSTALLATIONS ABOVE 5,000 FEET REQUIRE REPLACEMENT OF THE BURNER ORIFICES IN ACCORDANCE WITH THE NATIONAL FUEL GAS CODE (ANSI/NFPA 54). FAILURE TO REPLACE THE ORIFICES WILL RESULT IN IMPROPER AND INEFFICIENT OPERATION OF THE APPLIANCE, PRODUCING CARBON MONOXIDE GAS IN EXCESS OF SAFE LIMITS, WHICH COULD RESULT IN SERIOUS PERSONAL INJURY OR DEATH.

These Genesis Series 300/301 boilers are equipped with prejet orifices which are self-regulating. This makes it unnecessary to replace these prejet orifices for high altitude installations (up to 5,000 feet only. Consult the factory for higher altitudes). These prejet orifices will automatically compensate for higher elevations and adjust the appliance's input rate accordingly, see Table 9.

Some utility companies derate their gas for altitude. You should contact your gas supplier for any specific changes which may be required in your area. Call the local gas utility to verify BTU content of the gas supplied.

Ratings specified by manufacturers for most boilers apply for elevations up to 2000 feet (600 m). For elevations above 2000 feet (600 m) ratings must be reduced by a rate of 4% for each 1000 feet (300 m) above sea level.

Example: A Genesis boiler is rated at 750,000 Btu/hr. input at sea level. At an altitude of 5,000 (1500m), the prejet orifices will decrease the input rate by 20% (= 4% x 5) to a new rating of 600,000 Btu/hr. (= 80% x 750,000 Btu/hr.) The input reduction is achieved by the prejet orifices through self-regulation.

WIRING CONNECTIONS

ALL ELECTRICAL WORK MUST BE INSTALLED IN ACCORDANCE WITH THE MOST RECENT VERSION OF THE NATIONAL ELECTRICAL CODE NFPA 70/CANADIAN ELECTRICAL CODE, CSA 22.1 AND MUST CONFORM TO LOCAL REGULATIONS.

AN ELECTRICAL GROUND IS REQUIRED TO REDUCE RISK OF ELECTRIC SHOCK OR POSSIBLE ELECTROCUTION. Make the ground connection to the wire provided in the electrical supply junction box on the boiler.

Grounding and all wiring connected to this boiler must conform to the local code authority having jurisdiction or, in the absence of such requirements, with the National Electrical Code, ANSI/NFPA 70 or CSA-C22.1 most recent edition.

IF ANY OF THE ORIGINAL WIRE, AS SUPPLIED WITH THE APPLIANCE, MUST BE REPLACED, IT MUST BE REPLACED WITH TYPE 105°C WIRE OR ITS EQUIVALENT.

The Genesis Hot Water Supply Boiler must be connected to a single phase dedicated line source that is:

120 volts, 60 Hertz, and 20 Amps.

The feedback contacts for a system controller (e.g. Honeywell Aquastat) that is attached to the thermostat input, must operate on the provided 24 VAC power.

Refer to the Connection Diagram, see Figure 15, and to the Schematic Diagram, see Figure 16.

TABLE 9: ORIFICE SIZE FOR NATURAL AND PROPANE (LP) GASES (U.S. AND CANADIAN INSTALLATIONS)
(Drill size unless otherwise indicated.)

Model	Rating Input BTUH	Number of Burners	Natural (3X)	Propane (3X)
GB/GW 300	300,000	6	0.091"	0.048"
GB/GW 400	399,900	8	0.091"	0.048"
GB/GW 500	500,000	10	0.091"	0.048"
GB/GW 650	650,000	13	0.091"	0.048"
GB/GW 750	750,000	15	0.091"	0.048"

GENESIS GB/GW 300-750 WIRING DIAGRAM

FIGURE 15.

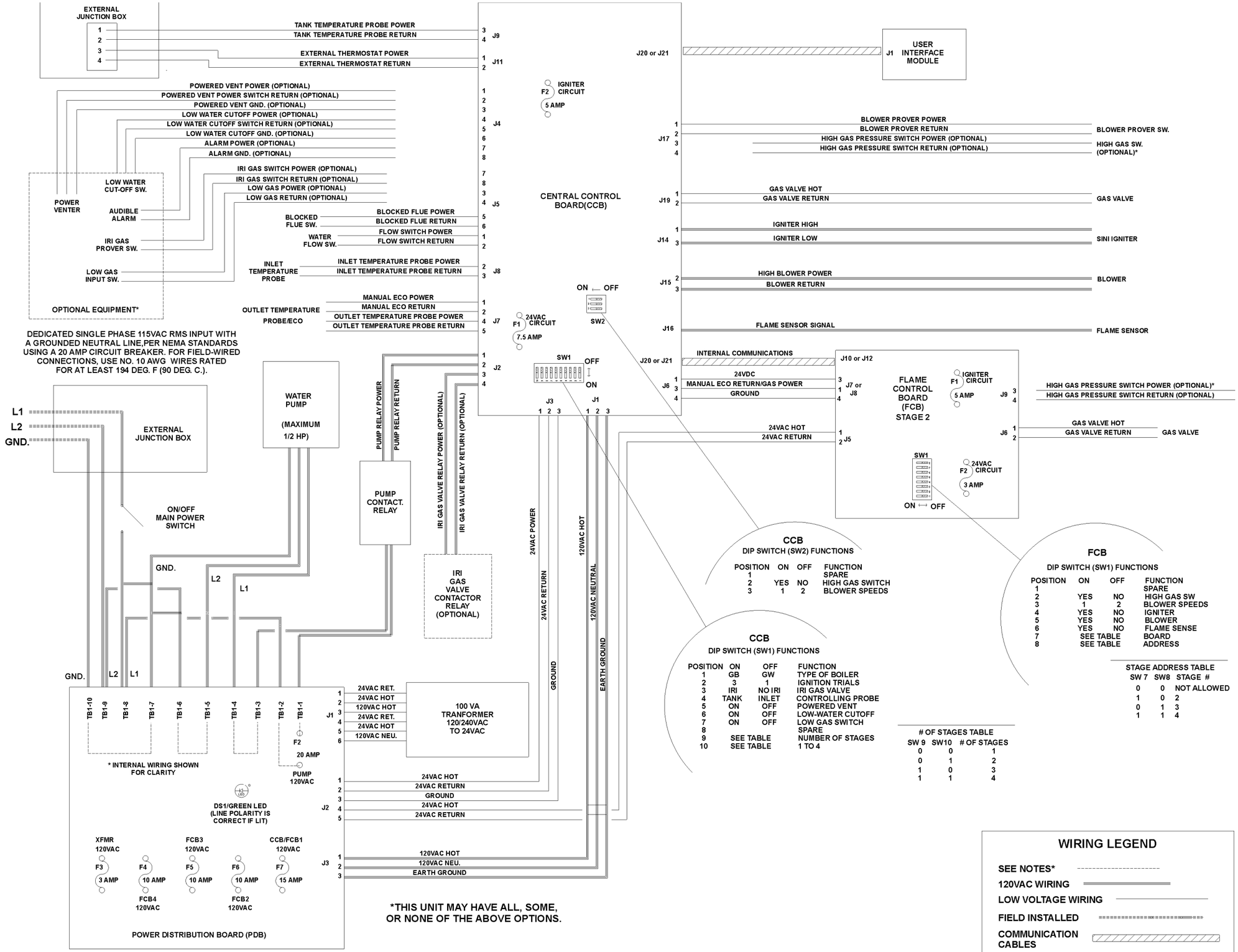

GENESIS GB/GW 300-750 SERIES 300-303 SCHEMATIC DIAGRAM

FIGURE 16.

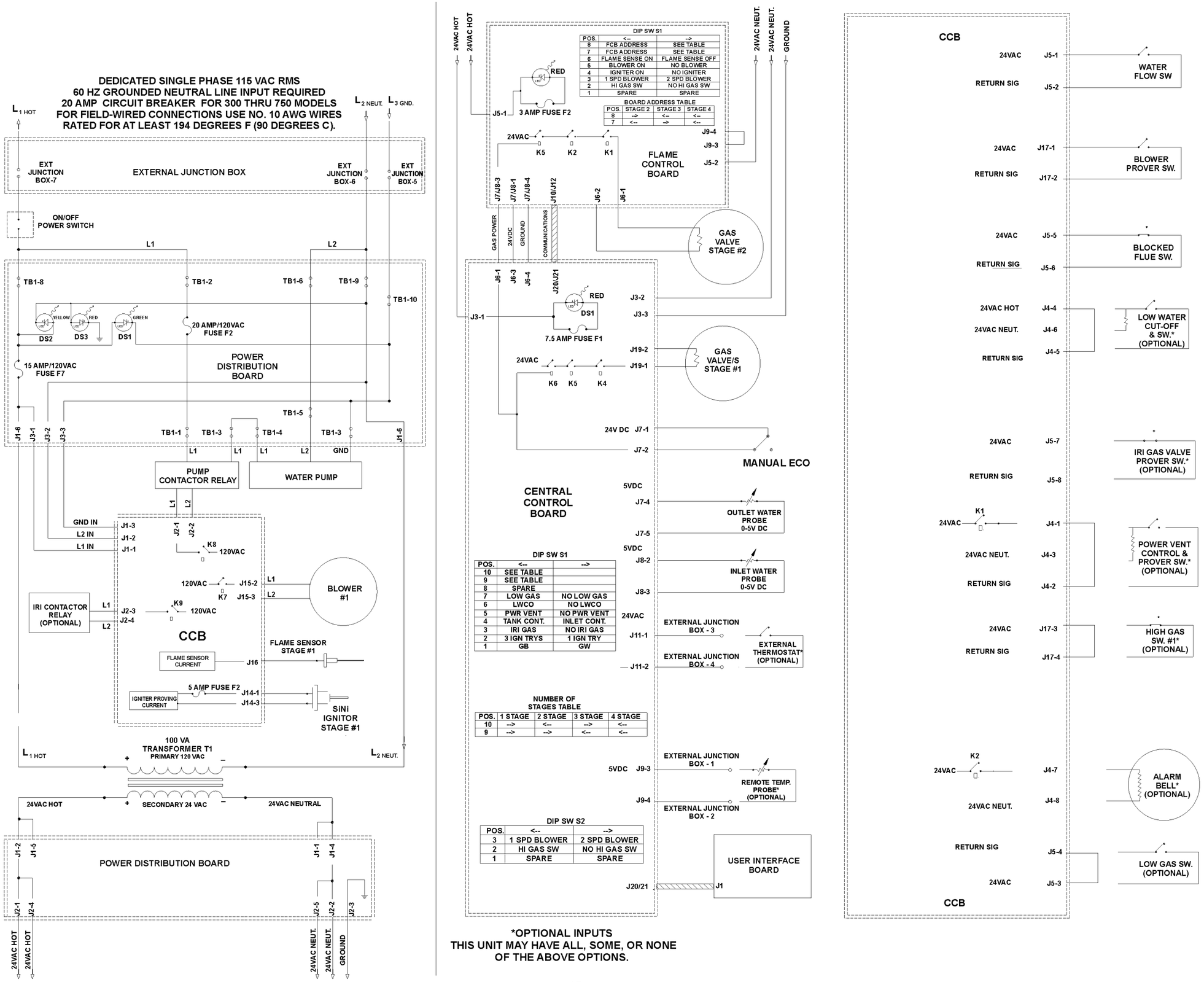

*OPTIONAL INPUTS
THIS UNIT MAY HAVE ALL, SOME, OR NONE
OF THE ABOVE OPTIONS.

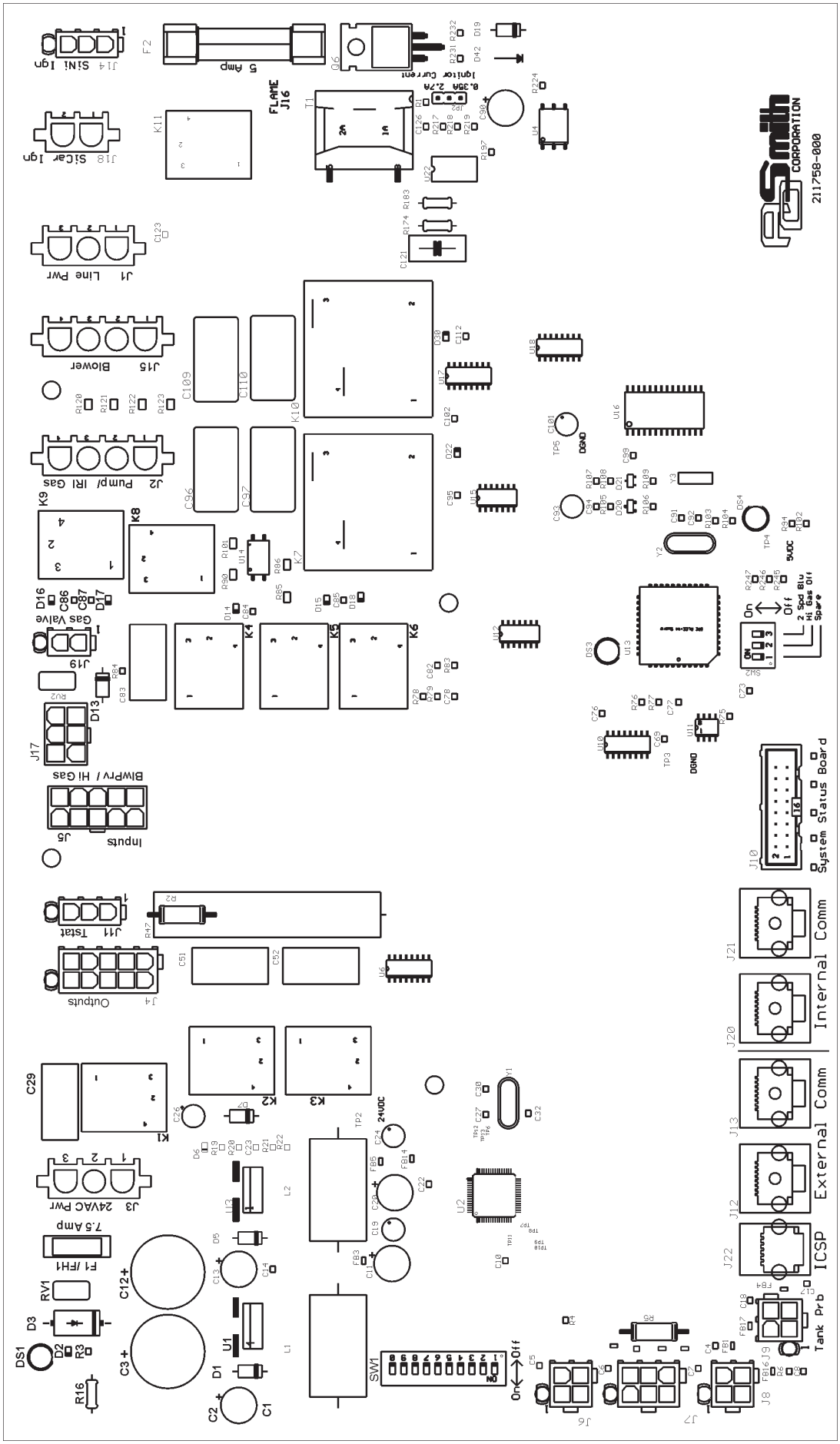

FIGURE 17A. - CCB CENTRAL CONTROL BOARD

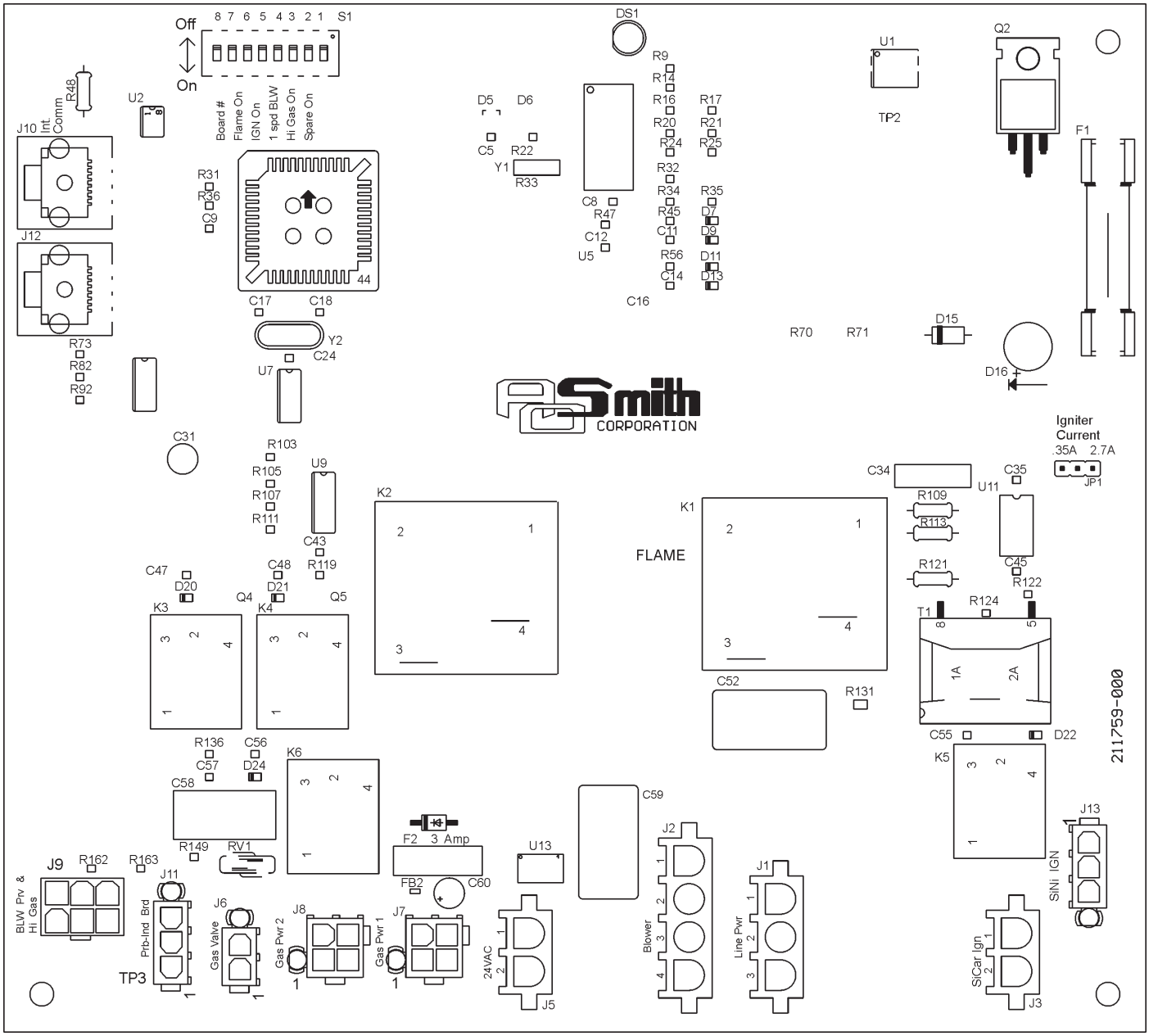

FIGURE 17B. - FCB (FLAME CONTROL BOARD) DIAGRAM

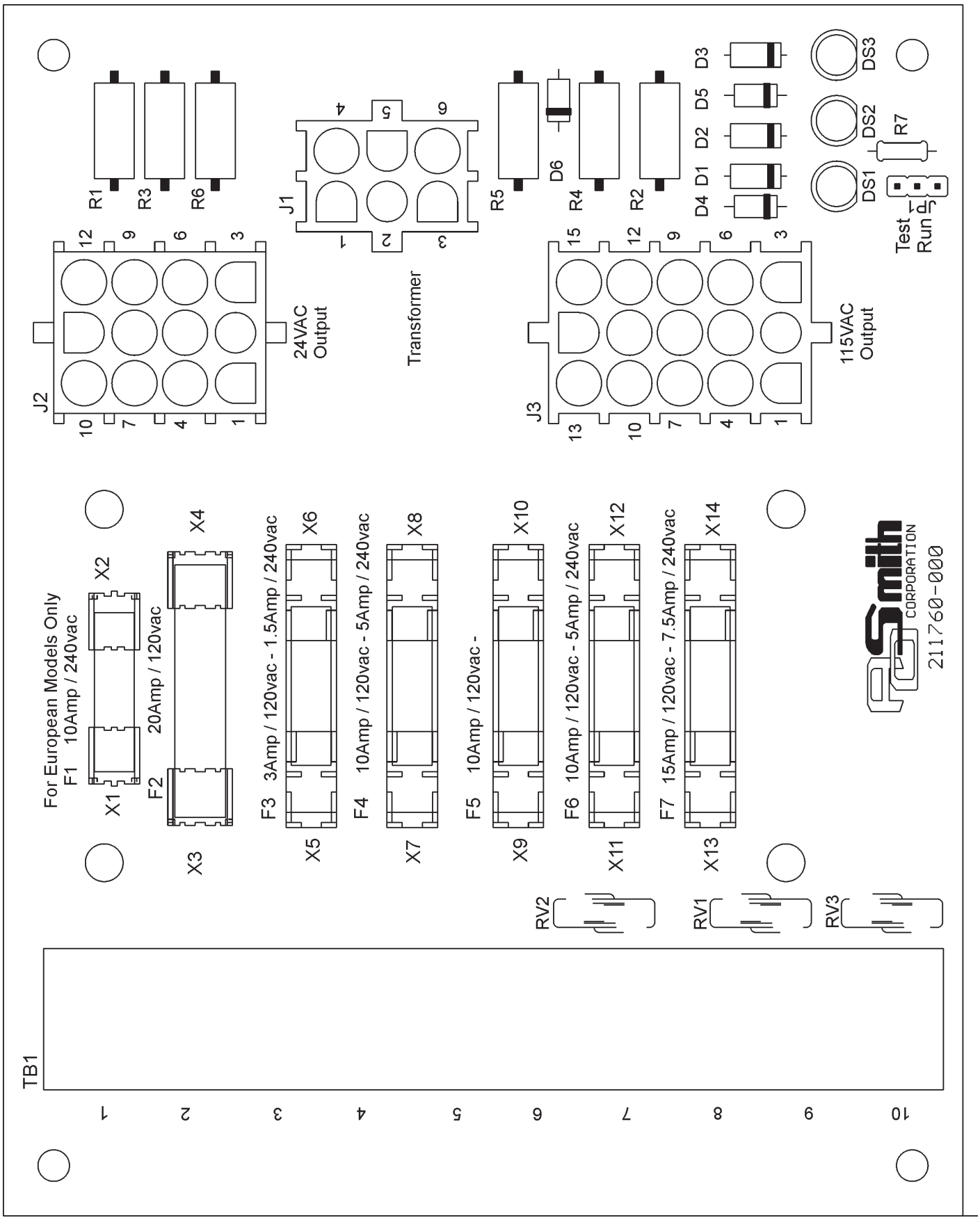

FIGURE 17C. - PDB (POWER DISTRIBUTION BOARD) DIAGRAM

Lighting Instructions for the G(B/W) 300 through 750 models

FOR YOUR SAFETY READ BEFORE OPERATING

WARNING: IF YOU DO NOT FOLLOW THESE INSTRUCTIONS EXACTLY, A FIRE OR EXPLOSION MAY RESULT CAUSING PROPERTY DAMAGE, PERSONAL INJURY OR LOSS OF LIFE.

FLAMMABLE

A. THIS APPLIANCE DOES NOT HAVE A PILOT. IT IS EQUIPPED WITH AN IGNITION DEVICE WHICH AUTOMATICALLY LIGHTS THE BURNER. DO NOT TRY TO LIGHT THE BURNER BY HAND.

B. BEFORE OPERATING: SMELL ALL AROUND THE APPLIANCE AREA FOR GAS. BE SURE TO SMELL NEXT TO THE FLOOR BECAUSE SOME GAS IS HEAVIER THAN AIR AND WILL SETTLE ON THE FLOOR.
WHAT TO DO IF YOU SMELL GAS
- DO NOT TRY TO LIGHT ANY APPLIANCE.
- DO NOT TOUCH ANY ELECTRIC SWITCH; DO NOT USE ANY PHONE IN YOUR BUILDING.
- IMMEDIATELY CALL YOUR GAS SUPPLIER FROM A NEIGHBOR'S PHONE. FOLLOW THE GAS SUPPLIER'S INSTRUCTIONS.
- IF YOU CANNOT REACH YOUR GAS SUPPLIER, CALL THE FIRE DEPARTMENT.

C. USE ONLY YOUR HAND TO PUSH IN OR TURN THE GAS CONTROL KNOB. NEVER USE TOOLS. IF THE KNOB WILL NOT PUSH IN OR TURN BY HAND, DON'T TRY TO REPAIR IT. CALL A QUALIFIED SERVICE TECHNICIAN. FORCE OR ATTEMPTED REPAIR MAY RESULT IN A FIRE OR EXPLOSION.

D. DO NOT USE THIS APPLIANCE IF ANY PART HAS BEEN UNDER WATER. IMMEDIATELY CONTACT A QUALIFIED INSTALLER OR SERVICE AGENCY TO REPLACE A FLOODED WATER HEATER. DO NOT ATTEMPT TO REPAIR THE UNIT! IT MUST BE REPLACED!

E. DO NOT OPERATE APPLIANCE UNLESS UNIT IS FILLED WITH WATER AND WATER LINES ARE FULLY OPEN.

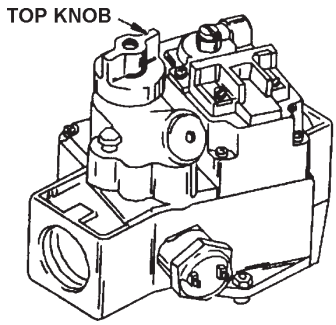

ROBERTSHAW

FIGURE "A"

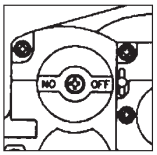

"OFF" POSITION

FIGURE "B"

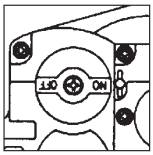

"ON" POSITION

WHITE-RODGERS

FIGURE "A"

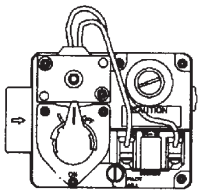

"OFF" POSITION

FIGURE "B"

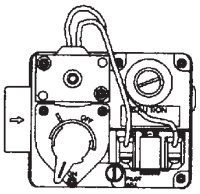

"ON" POSITION

OPERATING INSTRUCTIONS

1. STOP! READ THE SAFETY INFORMATION ABOVE ON THIS LABEL.
2. SET THE SYSTEM CONTROLLER TO THE LOWEST SETTING.
3. TURN OFF ALL ELECTRIC POWER TO APPLIANCE.
4. THIS APPLIANCE IS EQUIPPED WITH AN IGNITION DEVICE WHICH AUTOMATICALLY LIGHTS THE BURNER. DO NOT TRY TO LIGHT THE BURNER BY HAND.
5. REMOVE CONTROL ACCESS PANEL.
6. REFER TO DIAGRAMS ABOVE. TURN TOP KNOB OF GAS CONTROL CLOCKWISE (ON EACH OF THE TWO GAS TRAINS!) TO "OFF" POSITION, (FIGURE A).
7. WAIT FIVE (5) MINUTES TO CLEAR OUT ANY GAS. THEN SMELL FOR GAS, INCLUDING NEAR THE FLOOR. IF YOU SMELL GAS,

   STOP ! FOLLOW "B" IN THE SAFETY INFORMATION ABOVE ON THIS LABEL. IF YOU DON'T SMELL GAS, GO TO THE NEXT STEP.
8. TURN TOP KNOB OF GAS CONTROL (ON EACH OF THE TWO GAS TRAINS!) COUNTERCLOCKWISE TO "ON" POSITION, (FIG. B).
9. REPLACE CONTROL ACCESS PANEL.
10. TURN POWER SWITCH TO "ON" POSITION.
11. SET THE SYSTEM CONTROLLER TO DESIRED SETTING.
12. IF THE APPLIANCE WILL NOT OPERATE, FOLLOW THE INSTRUCTIONS "TO TURN OFF GAS TO THE APPLIANCE" AND CALL YOUR SERVICE TECHNICIAN OR GAS SUPPLIER.

TO TURN OFF GAS TO APPLIANCE

1. SET THE SYSTEM CONTROLLER TO THE LOWEST SETTING.
2. TURN POWER SWITCH ON APPLIANCE TO "OFF" POSITION.
3. REMOVE ACCESS PANEL TO EXPOSE GAS CONTROLS.
4. REFER TO DIAGRAMS ABOVE. TURN TOP KNOB OF GAS CONTROL (ON EACH OF THE TWO GAS TRAINS!) CLOCKWISE TO "OFF" POSITION, (FIGURE A).
5. REPLACE CONTROL ACCESS PANEL.

There are five (5) electrical connections that must be made for the boiler to operate correctly.

1. Black 120 VAC hot.
2. White 120 VAC neutral.
3. Green ground.
4 (2) [one black/white wire and one yellow/violet wire] 24 VAC thermostat wires [either shorted together or attached to a thermostat] or (2) [both yellow] tank probe wires.

These connections shall be made at the rear of the unit where a junction box is provided. ***An electrical ground is required to reduce the risk of electrical shock or possible electrocution. A ground wire grounded to the boiler cabinet is provided in the rear junction box.***

CHECK FOR APPROPRIATE ELECTRIC SUPPLY

1. Turn the power OFF.
2. Locate PDB (power distribution board) inside the controls area. Relocate jumper 'JP1" from "RUN" pins to the "TEST" pins (These are the left two pins).
3. Disconnect wire harnesses from J1, J2 & J3.
4. Turn power "ON".
5. If the amber and green LED's are lit, electric supply is good. Go to step 7, otherwise go to step 6.
6. Check polarity and repeat the test until pass.
7. Put the jumper back on the “RUN” pins. Go to step 8.
8. Replace harnesses/jumper to the original position.

ELECTRONIC HOT SURFACE IGNITION CONTROL

The EMC 5000 control system is a fully integrated, state of the art electronic control system. It consists of sensors, output devices, a power switch, a 24vac transformer, wiring and the following printed circuit boards:

- Central Control Board (CCB), see Figure 17A.
- Flame Control Board (FCB), see Figure 17B.
- User Interface Module (UIM), see Figure 19.
- Power Distribution Board (PDB), see Figure 17C.

The CCB contains circuitry for both master control and flame control for the first stage. The FCB contains circuitry for flame control on up to one additional stage. Dip switches on the CCB and FCB are used to configure the system. The User Interface Module (UIM) communicates with the user through a set of touch pads and a 4-line, 20-character LCD display. The PDB provides connection points for input power, the water pump, and the transformer. It also distributes power to the system and contains the system fuses.

Dual-stage control is accomplished by means of an internal communications network and the FCB's. One FCB is required for each stage beyond the initial first stage. The CCB also contains an external communications system to allow for connection to a PC, a modem, an EMS system, or something similar. Through this connection multiple boilers can also be linked together. **CAUTION: The internal communications cables should never be connected to the external communications connectors and vice-versa.**

There are several microcontrollers used on the boards. These micros control the temperature and ignition control functions for the boiler. Inherent in the design are the normal operating sequences and safety features associated with a gas ignition control system. The system continuously performs various diagnostic tests to verify proper appliance and control operation. Should an unsafe condition occur, the control will shut down the burner and display a red fault light as well as indicate the cause of the fault on the display. The operating programs for the system are stored in permanent memory inside the micros. User-selectable operating parameters and a history of detected faults are stored in re-writable memory in the micros. A loss of power does not affect either of the memories.

Inputs to CCB and FCB
Temperature Sensors:

- Temperature probes (CCB - outlet and either inlet or tank is required): The CCB accepts analog temperature inputs from up to three sensors (inlet, outlet and tank).
- ECO input (CCB - required):
  The ECO (emergency cut out) is a Temperature switch, which is located inside the outlet probe. It is a normally closed switch that opens if the probe is exposed to a temperature higher than the trip point. Once tripped, control system needs manual reset.
- Thermostat input (CCB - optional):
  This input is set up to work with an externally connected thermostat that provides a contact closure. If this input is closed and everything else is in the proper state, a "call for heat" condition will be initiated. These leads should be shorted together, when a thermostat is not being used. If it is desired that the thermostat control the temperature of the boiler, the operating setpoint of the system should be set higher than the temperature that the thermostat is controlling to. This will allow the thermostat to control the boiler. When the thermostat closes, a call for heat will be generated until the thermostat determines that the required temperature has been reached.

Air Pressure Sensors (open condition indicates fault):

- Blocked Flue (CCB - required):
  Normally closed switch that opens if the flue becomes blocked during operation.
- Powered Vent (CCB - optional):
  Normally open switch that closes when the powered vent is operating properly. This input is enabled/disabled by a dipswitch on the CCB.
- Blower Prover (CCB - required).
  Normally open switch that closes when the air pressure produced by the blower is above the set point.

Gas Pressure Sensors (open condition indicates fault):

- Low Gas (CCB - optional):
  Normally open switch that closes when the gas pressure rises above the trip level. This input is enabled/disabled by a dipswitch on the CCB.
- Hi Gas (FCB - optional):
  Normally closed switch that opens if the gas pressure exceeds a set value. This input is enabled/disabled by a dipswitch on the CCB and FCB's.

Water Level Sensor (open condition indicates fault):

- Low Water Cut Off (CCB - optional):
  Normally open switch that closes when water reaches preset level. This input is enabled-disabled by a dipswitch on the CCB.

Water Flow Sensor:

- Flow (CCB - required):
  Normally open switch that closes when flow exceeds a set value.

IRI Gas Valve Sensor:

- IRI Gas Valve (CCB - optional):
  Normally open switch that closes when the IRI Gas Valve is operating correctly. This input is enabled/disabled by a dipswitch on the CCB.
- **Flame Sensor:**
  Flame (CCB - required).
  Returns a signal to the microprocessor if flame is detected in the burner. If the probe is missing or shorted, the flame will not be detected. This input is enabled/disabled by a dipswitch on the FCB.

Outputs from CCB and FCB's:

Relay Contact Output:

- IRI Gas Valve (CCB - 120 vac - optional):
  Provides electrical power to operate an IRI Gas Valve Device.
- Alarm (CCB - 24vac - optional):
  Provides electrical power to operate an external alarm. This can be an audio device (i.e. Sonalert), a visual device (lamp), or any other device that will operate with the voltage and current level provided.
- Pump (CCB - 120vac - required on systems that do not have an external pump):
  Provides electrical power to directly operate a pump or the coil of an externally connected contactor.
- Powered Vent (CCB - 24 vac - optional):
  Provides electrical power to operate a powered vent.
  • Blower (CCB / FCB - 120vac - required).
  Single speed blowers utilize the high blower output only. Dip switches on the FCB's enable/disable the use of blowers on stages 2, 3 and 4.
- Igniter (FCB - 120vac - required).
  Provides power to operate the HSI igniters. Dip switches on the FCB's enables/disables the use of HSI igniters on stages 2, 3 and 4.
- Gas Valve (FCB - 24vac - required):
  Provides power to activate the gas valve. The gas valve cannot be activated when the ECO contacts are open

  Direct Connection Output:
- Low Water Cut Off (CCB - 24vac - optional)
  Directly connected to the 24 vac line to provide power to operate an external LW/CO device.

CCB/FCB Indicator Lamps & Fuses

A green LED is mounted on the PDB to indicate when line voltage is applied. (The CCB/FCB/PDB also contain a yellow, green, red LED, and a test/run jumper, that are used during installation to verify proper power connections.) A red LED on the CCB is used to indicate when the 24vac input fuse has blown. The FCB's also have fuses on their 24vac power line. (Recommended replacement fuses are: Littlefuse p/n 29707.5 for the 7.5 amp CCB fuse, and Littlefuse p/n 297003 for the 3 amp FCB fuses.) **Repeated failure of a fuse is an indication of failure in some part of the system.**

Yellow LED's are located near the micros on the CCB and FCB's. These LED's are "heartbeat indicators" and blink approximately twice per second to indicate that the micros are running. (The blink rate of the LED next to the micro that controls the silicon Nitride igniter will change when the igniter is being powered and when a fault is detected with the operation of that igniter.)

CCB/FCB Jumpers:

The CCB has two jumpers and the FCB has one. JP1 on the CCB is used to terminate the external communications line. It is normally left off and installed when the external cable is very long. JP2 on the CCB and JP1 on the FCB, are for factory use only.

Igniters

The EMC 5000 system operates with Silicon Nitride Igniter.

CCB/FCB Dip Switches:

Dipswitch configurations are <u>READ ONLY ON POWER UP.</u> These switches are only to be set at the factory or by authorized-trained personnel only! Once set at installation they generally remain that way for the duration of the life of the product. If a switch is changed, power must be cycled before the change will take effect. The status of all dipswitches can be observed on the system status screen on the UIM.

CCB - Ten Position Dipswitch (Central Control Board)

SWITCH		
Switch 1: Selection of the type of boiler application:	On = GB/LB	Off = GW/LW
Switch 2: Trials for Ignition:	On = 3	Off = 1
Switch 3: IRI Gas Valve Option:	On = IRI	Off = No IRI
Switch 4: Controlling Probe:	On = Tank	Off = Inlet
Switch 5: Powered Vent:	On = Yes	Off = No
Switch 6: Low Water Cut Off:	On = Yes	Off = No
Switch 7: Low Gas	On = Yes	Off = No
Switch 8: Spare:		
Switch 9 & 10. Number Stages (FCB's):	9	10 #stages
	Off	On = 2

NOTE: If the unit power up with the number of stages selected by dip switches exceeding the number of FCBs, the CCB will detect this condition and go into a hard lockout. **After changing the dip switches to the correct number of stages, the power must be cycled off and on to accept the change.**

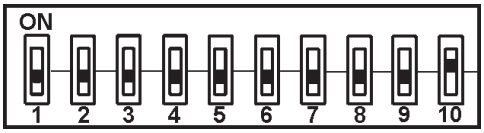

Example of Dip Switch configuration:
GW model, 1 ignition trial, No IRI, Inlet control, No Power Vent, No LWCO, No Low Gas, 2 stage.

CCB - Three position Dipswitch (SW2):
This dipswitch is similar to the FCB dipswitches described below, but with only three switches being used: the number of blower speeds (switch #3), Hi Gas option (switch #2) and a spare (switch #1). Only the blower speed selection and Hi Gas are required because FCB1 always has a blower, igniter, flame checking, and the address is always stage 1.

CCB-SW2

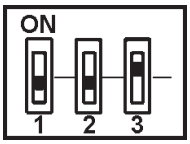

FCB - Eight position Dipswitch

SWITCH		
Switch 1: Spare:		
Switch 2: Hi Gas:	On = Yes	Off = No
Switch 3: Number of Blower Speeds:	On = 1 speed,	Off = 2 speed
Switch 4: Igniter used:	On = Yes,	Off = No
Switch 5*: Blower used:	On = Yes,	Off = No
Switch 6: Flame Checked:	On = Yes,	Off = No
Switch 7 & 8. Stage selection:	7 8	Stage #
	On Off	2

*When switch 5 is in off (no blower) position, switch 3 (blower speeds) is ignored.

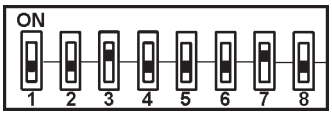

Example of Dip Switch configuration:
No high gas, 1 blower speed, no igniter, no blower, no flame check Stage 2.

The Silicon Nitride igniter is activated from a triac on the board that is controlled by a dedicated microcontroller and associated circuitry. This circuit monitors the igniter operation closely and informs the CCB and FCB micros when faults are detected. A yellow "heartbeat" LED located next to the dedicated micro flashes a two digit code when faults are detected.

Appliance Operating Sequence

NOTE: The following sequence is based on a two-stage system.

1. The EMC 5000 controller has four modes of operation: Initialization, Standby, Running, and Service. The internal CCB and FCB micros control these modes through a sequence of steps (or States) which are further described in the "UIM Operating Procedures" section.
2. When power is applied to the system, it enters the initialization mode and the following automatic functions are performed:
   - A. O. Smith opening screen is displayed.
   - The system goes through a calibration indicated by the green running LED blinking and then staying on; next the red service LED and yellow standby LEDs come on, next the stage 1 service and runnings LEDs blink ON and OFF followed by stage 2, stage 3, stage 4 and then back to stage 1, 2, 3, 4 LEDs.
   - Stored values are recalled from memory.
   - Configuration dipswitches are read.
   - Pending faults are recalled
   - Micros on all boards start running (indicated by a flashing Yellow LED near each micro)
   - Input sensors are read
   - Communications between micros and boards is established
   - FCB's are configurated with the number of ignition trials to run.
3. After initialization is complete (approximately 10 seconds) the system turns the green LED off and goes to the standby mode (yellow "Standby" LED on), unless a previously stored fault has been recalled, which will send the system into the service model (red "Service" LED on). In standby mode the display shows the temperature screen and in fault mode the current error screen is displayed.
4. The system then compares the temperature read from the controlling probe (inlet or tank) to the setpoint temperature. If the temperature is less than the operating setpoint minus the differential temperature and the thermostat input is closed then a call for heat is established and the system shifts to the run mode (green "Running" LED turns on).
5. The heating sequence begins by applying power to the pump and, if selected, the powered vent and the IRI gas valve.
6. After a few seconds the Blower is turned on to perform a cold purge of the chamber.
7. The stage 1 igniter is turned on.
8. After 18 seconds the system checks that the igniter has turned on an OK signal from the Silicon Nitride mirco. If this is ok then the system turns on the gas valve.
10. After 1.5 seconds the system checks the status of the flame sensor. If flame is detected the system leaves the gas valve "ON". Note: If the "Ignition Tries" dipswitch is set for 3 tries the system will not declare an error until it tries the ignition sequence three times. If it is set to 1 try then the system will declare an error anytime a fault is detected.
11. The system now activates the other FCB stages depending upon a control algorithm scheme that is described below.
12. After 5 seconds the system turns on the gas valve for stage 2.
13. Carryover flame from stage 1 ignites stage 2's burners.
14. The system is now in the heating mode with both stages on and will remain in this mode until the call for heat is satisfied or a fault occurs.

NOTE: In standby and running modes the system constantly monitors the signals and the internal operation for faults. Any detected fault will halt the heating sequence and shift the system to the service mode, where the detected fault will be displayed.

Temperature Setpoints (System Control Algorithm)

The boiler has a hysteresis type control, which means that it will begin heating the water when the temperature sensed by the control probe (inlet or tank) falls below the operating setpoint minus the differential setpoint for stage 1. It will stop heating the water when the temperature rises to the operating setpoint. If the system has multiple stages then the differential setpoint for each stage is also subtracted from the operating setpoint. The following examples will further explain this operation.

Setup: 2 stage system, operating setpoint - 140, stage 1 to 2 differential setpoints = 10.

Example 1. Temperature begins at 150 and drops to 90, see Figure 18A. At 140 the system remains in idle mode. As the temp drops to 130 (140-10) stage 1 turns on and stage 2 remains off. At 120 stage 2 also turns on.

Example 2. Temperature begins at 90 and rises to 150, see Figure 18B. At 100 both stages are on. (This is the case when a boiler is first started and the controlling temperature is below the operating setpoint minus all of the differential setpoints. At that time both stages are turned on, in sequence from 1 to 2. At 130 stage 2 turns off. At 140 both stages are off.

Stages 1 and 2 will turn on in sequence from 1 to 2.

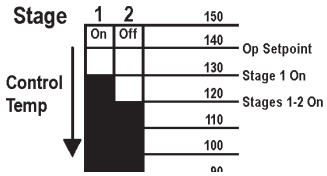

FIGURE 18A.

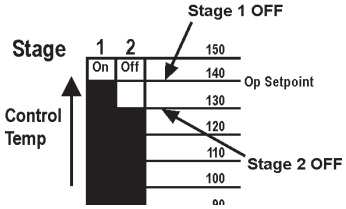

FIGURE 18B.

UIM OPERATING PROCEDURES

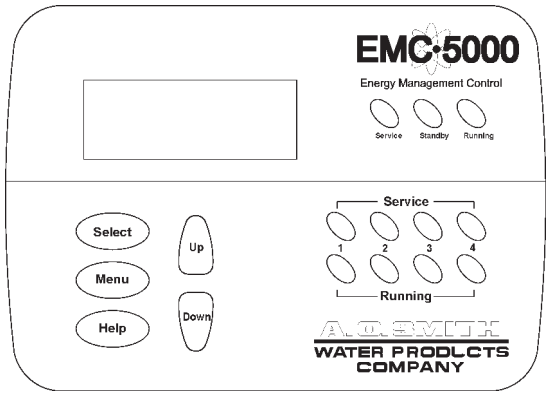

FIGURE 19. UIM, USER INTERFACE MODULE

The UIM receives commands from the user and displays operational information to the user via an LCD (liquid crystal display) up to eleven LED's, and five touch switches. The LCD provides information to the user by the use of 10 menu-activated screens. Within each of the screens, helpful information can be displayed by pressing the "Help" button. The LED's visually inform the user about the mode the system is in. The touch switches allow the user to control the operation of the system. The operation of these parts is described in the following section:

UIM Screens:
On all screens a double vertical bar appears on the right side of the display each time a key is touched to indicate that a key has been activated. On several screens an indicator ">" appears on the left side of the display to indicate the active line. The "Up/Down" keys are used to move the indicator to the desired line and the "Select" key is pressed to select the line. Also, on most of the screens, up/down arrows appear on the right side of the screen to indicate that there is additional lines either above or below the displayed four lines.

- **Menu Screen:**
  Displayed when the user presses the "Menu" key. This screen is the selection point for the other 9 screens.
- **Temperature Screen:**
  Displays the sensed temperatures of the Outlet, Inlet, and Tank probes. Also displayed is the calculated Delta T (Outlet minus Inlet) for the system. Shorted ("Short") and disconnected ("----") probes are also displayed.
- **System Status Screen:**
  This screen is used to view the status of switch inputs and output states. An asterisk (*) is displayed next to the label when the status is "True" (the description is fulfilled). For example, if water is flowing, or detected by the flow sensor, then an "*" will appear in front of the Flow label (i.e. *Flow). Another example would be the ECO switch. If the outlet temperature is too high the display will show: *ECO.

NOTE: The LW/CO, IRI Gas Valve, Powered Vent, High Gas, and Low Gas inputs are optional inputs. Flame sensing, Igniters, and Blowers are optional on Stages 2, 3 and 4. (Except on a 4-stage system, stage 2 always has an Igniter, Blower, and Flame Sensor. Those dipswitches on stage 2 are not relevant.) One or two speed blowers can be used on any stage.

The System monitors the inputs at these times:

- ECO, LWCO, Blocked Flue, Low Gas, Hi Limit, and Hi Gas - at all times for a fault condition.
- Tstat - at all times for open/closed conditions.
- IRI Gas and Powered Vent - for an on condition when their outputs (Pump, IRI Gas Pwr, Powered Vent Power) are turned on and an off condition at all other times.
- Flow - for an on condition when the pump is on (no check for off state)
- Blower Prover - when the Blower is on.
- Igniter Current - for an on condition approximately 18 seconds after the Igniter is turned on until the igniter is turned off and an off condition at all other times.
- Flame - for an on condition approximately 5 seconds after the gas valve is turned on until the valve is turned off and at all other times for an off condition.

Control Status Screen:
Displays the status that the CCB and FCB micros are in. The CCB has 5 possible states and the FCB's have 9. The normal CCB states sequence is to move from Idle, to Pre-Circulate, then to Heating Stage 1-2 when a call for heat is initiated. Once heat has been satisfied or the Thermostat is opened, the sequence moves to Post-Circulate and then back to Idle. If a fault occurs at any time, the process jumps out of sequence and goes directly to the appropriate Hard or Soft Fault state.

Description of CCB control states:
- Idle:
  The yellow "Standby" LED is turned on and the system waits for a heat request (determined by the Thermostat or controlling

The following status information is displayed from the **System Status Screen**:

Status Displayed	*(True Condition)	Input	Output
ECO	Outlet temperature too high	open	- - - -
LW/CO	Water Level low	open	- - - -
Blk Flue	Flue blocked	open	- - - -
Flow	Water flowing	closed	- - - -
Low Gas	Gas pressure low	open	- - - -
Tstat	Thermostat requesting heat	closed	- - - -
Hi Limit	Outlet temp exceeds High Limit setpoint	- - - -	- - - -
Pump	Pump output activated	- - - -	On
IRI Gas Pwr	IRI output relay activated	- - - -	On
IRI Gas	IRI Gas Valve on	closed	- - - -
Pwr Vent	Power Vent running	closed	- - - -
Alarm	Alarm output activated	- - - -	On
Pwr Vent Pwr	Power Vent output relay activated	- - - -	On
	- - - - STAGES 1 to 2 - - - -		
BlwHi Prv	Blower pressure sufficient	closed	- - - -
Blw Hi	Blower High output activated	- - - -	On
BlwLo Prv	Blower pressure sufficient (not used at this time)	closed	- - - -
Blw Lo	Blower low output activated (not used at this time)	- - - -	On
Ignt Cur	Igniter current sufficient for ignition	- - - -	- - - -
Ignit	Igniter output is activated	- - - -	On
Gas Relay	Gas output relay activated	- - - -	On
Hi Gas	Gas pressure too high	open	- - - -
Flame	Flame detected	- - - -	- - - -

probe inputs). All outputs are off in this state except that if the Post-Circulate time is set to continuous, the pump will be on. When the heat request is received, the system moves to the Pre-Circulate state.

- Pre-Circulate:
  The yellow LED is turned off and the green "Running" LED is turned on. The green LED will remain on for all other states except the fault states. If enabled the powered vent and the IRI gas valve are turned on. A command is sent to all active stages to cold purge the system. Cold purging clears out any combustion gas that may be in the combustion chamber. When purging is complete the system moves to the Heat State.
- Heat Stages 1-2:
  The system will command the FCB micros to start their heat sequence starting with stage 1. Stage 2 will be activated in order based on an algorithm that determines how much heat is needed. The system will remain in this state until the heat request is satisfied, the Tstat is opened, or a fault occurs.
- Soft Fault State: (See "Fault Description" section for list of soft and Auto Reset faults.)
  The CCB turns off the Powered Vent and the IRI Gas. The pump remains on for the selected post-circulate time to cycle the hot water out of the boiler. The FCB's are commanded to shut down and the Alarm output is turned on. The green LED turns off and the red "Service" turns on. The CCB remains in this state until one of the following occurs:
  - One hour passes (automatic restart after one hour)
  - If Communications error system will automatically restart if communications re-establishes.
  - If user presses Select key while current error screen is displayed (Hard reset).
  - If high-limit error - the outlet temperature drops below the high limit trip point minus the high limit differential. (outlet water temperature drops to safe level). The fault is logged in the error history when the fault state is exited.
- Hard Fault State: (See "Fault Description" section for list of soft and Auto Reset faults.) The CCB turns off the Powered Vent and the IRI Gas. The pump remains on for the selected post-circulate time to cycle the hot water out of the boiler. The FCB's are commanded to shut down and the Alarm output is turned on. The green LED turns off and the red "Service" turns on and off (flashes). The only way to exit this state is for the user to press the Select key while the current error screen is displayed. The fault is logged in the error history when the fault state is exited.

While the CCB is in the Heating mode the activated FCB stage moves from Idle, to Pre-Purge, to Heat Igniter, to Check for Flame, and then to Heating. The process waits in this state until the call for heat is satisfied, the thermostat input is opened, or a fault occurs. When heat is satisfied, the sequence continues to Post-Purge and then back to Idle. If three tries for ignition has been selected on the CCB dipswitch and flame is not detected at the appropriate time, then the sequence moves to the Inter-Purge state for 15 seconds and the FCB heat sequence is repeated. If flame is still not detected after the third try the process declares a fault, jumps out of sequence and goes to the error state. Other types of faults detected at any time will also cause a jump to the error state.

Description of FCB control states:

- Idle State:
  If a Silicon Nitride igniter is being used then its condition is determined and any error is declared. The system will remain in this state until the CCB requests a heating cycle or a cold purge. The blowers, igniter, and gas relay are turned off.
- Pre-Purge State:
  If the stage does not have a blower, this state is skipped and the system advances to the Heat Igniter State. Otherwise the Blower is turned on. After 10 to 34 seconds (34 seconds for cold purging) the system switches to the Heat Igniter State.
- Heat Igniter State:
  The igniter relay is turned on and a go command is sent to

the Silicon Nitride micro. Responses returned from the current feedback sensor and the Silicon Nitride micro are checked to determine which type of igniter is being used. (Note: This is only done the first time the igniters are fired after power is applied. This allows the user to change igniter types after shutting off power.) If the current feedback sensor is still active after approximately 18 seconds have passed, or the Silicon Nitride micro has returned a signal indicating that the igniter has fired properly then the system advances to the Check for Flame state. If the signals do not occur then an error is declared unless the Ignition Tries dipswitch is set to three. Then the system advances to Inter-Purge state and retries ignition until it completes three tries. Then it will declare an error.

- Check for Flame State:
  The gas valve is turned on. After 1.5 seconds, the system checks that the gas valve relay is on. If it is not, the ignition trial is considered to have failed and the system advances to the Inter-Purge state, if any ignition trials remain, otherwise an error is declared.

  The flame sensor is checked. If flame is detected, the igniter is turned off. The state machine then advances to the Heating State. If after 5 seconds, the flame is still not sensed then the ignition trial is considered to have failed. The state machine advances to Inter-Purge if any ignition trials remain, otherwise an error is declared.

- Heating State:
  The system remains in this state until the call for heat is cancelled or a fault occurs. The system returns to the Idle state if the call for heat is cancelled, or satisfied and to the appropriate fault state if a fault occur.

- Inter-Purge State:
  The gas valve and the igniter are turned off. The blower is on. After approximately 15 seconds the system goes back to the Heating Igniter State.

- Post-Purge State
  The gas valve and the igniter are turned off. If this stage does not have a blower the system returns to the idle state. If it does have a blower then the blower is left on. After approximately 25 seconds, the system returns to the Idle state.

- Error State
  The gas valve and the igniter are turned off. The FCB micro tells the CCB micro which error has occurred. The system waits in this state until the CCB sends a command to clear the error. Then the Silicon Nitride micro is reset and the system returns to the idle state.

- Cold Purge State
  Cold purge occurs when the CCB micro commands all blowers to go on before lighting the first stage to clear the unit of residual gases. This state normally lasts approximately 32 seconds but on a special situation can last up to 5 minutes. If on the first call for heat after power up, blower prover switch is open, this state will take up to 5 minutes before declaring an error. This special mode is used by service technicians to adjust the blower shutter.

  The CCB will wait the normal cold purge time (normally 32 seconds) before checking for activation of all active blower prover. If blower prover is active at this time the CCB cancels the cold purge request. After the first cold purge has been done a flag is set to prevent further activation of the shutter adjust 5 min. delay. Any further requests for cold purge will last the normal cold purge time. The FCB will go into fault mode if the blower prover does not activate after 15 seconds. This time allows the blower relay to activate, the blower to come up to speed, and the response from the blower prover to be filtered.

- User Settings Screen:
  Each setpoint or user setting has either a limited selection of values, or a limited range of values. The Up/Down keys are used to change values. After changing an item, the Select key is pressed to accept the change, or the Menu key is pressed to reject the change and restore the item to its original value. The following setpoints can be changed:

- Operating Setpoint:

  This setpoint sets the base temperature for the control algorithm, see Figure 18A & 18B.

OPERATING SETPOINT ADJUSTMENT PROCEDURE

The system has a standard programmable Operating Setpoint range of 70 Degrees F to 190 Degrees F for a GW and of 70 Degrees F to 220 Degrees F for a GB for either tank or inlet probe depending on selection. The user can easily change the Operating Setpoint at any time by using the following procedure. When any configuration or setpoint is changed (and the Select key touched), the new value is IMMEDIATELY saved to non-volatile memory. The factory default setting is 145 Degrees F for a GW and 190 Degrees for a GB.

1. Touch the MENU key.
2. Scroll the ">" with the DOWN key next to the USER SETTING SCREEN.
3. Touch the SELECT key.
4. Scroll the ">" with the DOWN key until it is pointing to OPERATING SETPOINT.
5. Touch the SELECT key.
6. Use the UP or DOWN key to select the value you wish to enter.
7. Touch the SELECT key to accept and store the new value.

- High Limit:
  The outlet temperature probe contains both an ECO switch and a thermistor for temperature measurement. The sensed outlet temperature is used for the automatically resettable High Limit setpoint. If the sensed outlet temperature exceeds the High Limit setpoint, a "soft lockout" condition will occur and the burner will be shut off. This fault condition is automatically cleared when the temperature drops below the high limit setpoint minus the high limit differential.

AUTO HIGH LIMIT SETPOINT ADJUSTMENT PROCEDURE/ OUTLET TEMP. PROBE

The High Limit setpoint has a range of 90 Degrees F to 210 Degrees F for a GW and a range of 90 Degrees to 235 Degrees F for a GB. Use the following procedure to change the automatically resettable High Limit Setpoint:

1. Touch the MENU key.
2. Scroll the ">" with the DOWN key next to USER SETTING SCREEN.
3. Touch the SELECT key.
4. Scroll the ">" with the DOWN key until it is pointing to HIGH LIMIT SETPOINT.

5. Touch the SELECT KEY.
6. Use the UP and DOWN key to select the value you wish to enter.
7. Touch the SELECT key to accept and store the new value.

- High Limit Differential:
  The outlet temperature must be below the automatic High Limit setpoint minus the High Limit Differential setpoint before a call for heat can be generated.

HIGH LIMIT DIFFERENTIAL SETPOINT ADJUSTMENT PROCEDURE

The High Limit Differential Setpoint has a range of 1 Degree F to 50 Degrees F for all models. Use the following procedure to change the High Limit Differential Setpoint:

1. Touch the MENU key.
2. Scroll the ">" with the down key next to USER SETTING SCREEN.
3. Touch the SELECT key.
4. Scroll the ">" with the DOWN key until it is pointing to HIGH LIMIT DIFFERENTIAL SETPOINT.
5. Touch the SELECT key.
6. Use the UP or DOWN key to select the value you wish to enter.
7. Touch the SELECT key to accept and store the new value.

- Operating Differential Setpoints:
  Each of the two stages has an independent Operating Differential setpoint.

OPERATING DIFFERENTIAL SETPOINT ADJUSTMENT PROCEDURE

Each of the two stages has an independent Operating Differential Setpoint. The range of these setpoints is from 1 Degree F to 50 Degrees F for all models. Use the following procedure to change this setpoint:

1. Touch the MENU key.
2. Scroll the ">" with the DOWN key next to USER SETTING SCREEN.
3. Touch the SELECT key.
4. Scroll the ">" with the DOWN key until it is pointing to OPERATING DIFFERENTIAL SETPOINT.
5. Touch the SELECT key.
6. Scroll the ">" with the DOWN key until it is pointing to the STAGE you want.
7. Touch the SELECT KEY.
8. Use the UP and DOWN key to select the value you wish to enter.
9. Touch the SELECT key to accept and store the new value.

- **Temperature Units:**
  Temperature can be displayed in either °F or °C units.
- **Post Circulate Delay Time:**
  The time circulation pump will stay on after the burner is turned off. The time in seconds is adjustable with the following values: 45, 90, 180 or continuous. If the continuous value is selected the pump will remain on at all times and the post circulate state time will be set at 45 seconds.
- **Network Address:**
  This is a unique number assigned to this boiler to differentiate it from other boilers or water heater on the same A. O. Smith proprietary network. A valid Network Address can be any number from 1 to 31. It is set by default to zero, which is an invalid address. The boiler will not communicate until it is changed to a valid and unique number. This prevents two units from trying to respond to the same request from the PC or supervisory network device.
- **Configuration Settings Screen:**
  Displays the status of the dipswitches installed on all boards as described earlier.
- **Log & System Info Screen:**
  Displays the following information:
  Elapsed hours of operation (Total time system has been powered up)
  Number of running minutes (Number of minutes system has been in the run mode)
  Number of cycles for each stage (Number of times stage has been in heat mode).
  Kbtu rating of the boiler (0 to 5750Kbtu in 10Kbtu increments)
  The software revision level of the CCB, and FCB microcontrollers.

Current Error Screen:

- Displays the last error that the system has detected plus a time stamp of when the error occurred. (The time stamp is based on the elapsed hours value at the time the error occurred. It is displayed in hours and minutes. This error remain displayed as long as it is still valid. When cleared it is moved to the Error History Screen. The system will automatically jump to this screen when an error is detected. It will also go to this screen upon power-up if an error was still valid when power was turned off.

  NOTE: Errors are cleared from this screen by pressing the "select" key.
- **Error History Screen:**
  This screen displays a list of the last 9 errors (with time stamps) that have occurred. The last error to occur is displayed first. If a new error occurs this screen is presented to display the error.
- **Reload Defaults Screen:**
  From this screen the user can restore the factory default values for screen adjustable configurations by pressing the Select key. The values restored are as follows:

  <u>GW Models</u>
  Oper Setpnt (Operating Setpoint) - 145° F (63° C)
  Stage1 Diff (Operating Setpoint Differential) = 3° F (2° C)
  Stage2 Diff (Operating Setpoint Differential) = 6° F (3° C)
  Hi Limit (High LImit Setpoint) = 210° F (99° C)
  Hi Limit Dif (High Limit Differential) = 20° F (11° C)

  <u>GB Models</u>
  Oper Setpnt (Operating Setpoint) = 190° F (88° C)
  Stage1 Diff (Operating Setpoint Differential) = 3° F (2° C)
  Stage2 Diff (Operating Setpoint Differential) = 6° F (3° C)
  Hi LImit (High LImit Setpoint) = 230° F (110° C)
  Hi Limit Dif (High Limit Differential) = 20° F (11° C)

  <u>Both Models</u>
  Tempert Units (Temperature Units) = F
  Post Cir Secs (Post Circulation pump delay = 45 seconds
  Network Address (Network Address) = (none)

UIM Touch Switches

Below the LCD display are five touch switches or keys, that the operator uses to operate the system.

- Menu Key:
  Pressing this key activates the menu screen where the other screens can be accessed.

- Select Key:
  This key performs several functions. Screens can be selected from the menu screen by pressing this key when the">" appears next to the screen desired.

  On the User Settings screen items that appear next to a ">" symbol can be selected with this key. If a setpoint configuration item is selected, the ">" will then flash slowly to indicate that the item has been selected. The Up and Down keys are then used to change its value.

  From the Current Error Screen this key is used to reset the system from an error:

- Up and Down Keys:
  These keys are used to move upwards and downwards in screens to reach a desired item and to change setpoints and user settings. They have an auto increment/decrement feature for some of the configurations and values. When you first press one of the keys and value changes by 1 count, then wait 1/2 second and changes slowly until the key is released or if held for 3 or more seconds it will change the value quickly.

- Help Key:
  Pressing the Help key from any screen displays helpful information about that screen. From the menu screen, general help information is displayed as to how to use the user interface. To return to the previous screen press the Help or Select keys, or press Menu key to go to the menu screen. If a small down arrow appears in the lower right hand corner then there is off screen content below what is displayed. Press the down arrow to scroll down to this information. After scrolling down an up arrow will appear in the upper right hand corner to indicate off screen content above what is displayed.

UIM LED's

The three LED's to the right of the LCD indicate the status of the overall system. The red LED indicates that a fault has been detected and the system has stopped running. It is on continuously for soft faults and flashes for hard faults. The Yellow LED indicates that the boiler is in a ready mode waiting for a call for heat command. When on continuously the Green LED indicates that the system is in the heating mode. If it is flashing it indicates that the UIM is in the initialization mode and the touch switches are being calibrated.

On these boilers there are also eight LED's on the lower right that indicate the state of the individual FCB's. The red LED's are only on when the main red LED is on and indicate which FCB has the error. The green LED indicates when flame is proved on that particular stage, unless the dipswitch for sensing flame is turned off. Then the LED indicates that the gas valve has turned on.

Fault Messages and Troubleshooting Guide

The EMC5000 system does excessive self-diagnostics and displays detected faults on the UIM display in an easy to read manner. There are approximately 80 different faults that can be detected. Some of the faults are caused by internal problems and some by external causes. The faults create different types of system lockouts (shut down). Hard lockouts are serious problems that require the user to manually restart the system. Soft lockouts can be reset by the user or after 60 minutes the system will automatically clear the error and restart. Auto Reset lockouts will monitor the cause of the fault and if the fault clears itself the system resets itself. The fault is recorded and the system immediately resets itself. The following table shows the fault messages and some possible troubleshooting hints:

TROUBLESHOOTING IGNITION SYSTEM

Fault Messages and Lockout Status (* = stage number: 1 or 2)

FAULT DISPLAYED	DESCRIPTION	RED LED	LOCKOUT
"Display Fail"	**Communications with UIM interrupted** Check communication cable to UIM. Try moving to other Internal Communications connector on CCB. Also check the connectors where the cable is plugged in for best connecting wires.	**Continuous**	**Auto Reset**
"Comm. Fail Stg.*"	**Communications with FCB interrupted** Same as above. Also try swapping FCB and UIM communications cables.	**Continuous**	**Auto Reset**
"Low AC Voltage"	**Line voltage less than 90 vac** Check incoming power line for loss of voltage. May also be caused by a power line brown-out (momentary loss of voltage)	**Continuous**	**Auto Reset**
"Low 24VAC"	**Voltage from transformer less than 18 vac** Check transformer output. Should be over 24vac. May be caused by excessive current drain or a faulty transformer	**Continuous**	**Auto Reset**
"Brown Out Reset"	**Indicates a brown out reset occurred** Caused by a momentary dip in voltage on the CCB +5vdc power bus. Contact factory. (Not considered a serious problem if it only occurs on very rare occasions.)	**- - - -**	**None**
"Timeout Reset"	**Indicates a watchdog reset occurred** Caused when the micro executes the software in an improper way. Contact factory. (Not considered a serious problem if it only occurs on very rare occasions.)	**- - - -**	**None**
"FCB Comm Timeout"	**FCB did not receive command from CCB** Caused when communications between the CCB and the FCB are interrupted. May occur when a surge of power on a nearby device (i.e. arc welder) creates an EMI burst. Not a serious problem if it occurs rarely.	**Continuous**	**SOFT**
"No Flow"	**Water is not flowing** Caused by the flow switch being open when it should be closed. Check water lines, pump, flow switch contacts, wiring.	**Continuous**	**SOFT**

"Blower Prov Stg*	**Blower pressure is too low it they should have been closed.** Check blower, switch contact, wiring, and for air leaks.	**Continuous**	**SOFT**
"Blocked Flue"	**Flue is Blocked** Caused by the blocked flue switch contacts being open when they should have been closed. Check for flue blockage,switch contacts, wiring.	**Continuous**	**SOFT**
"High Limit"	**Outlet temp. exceeded high limit setpoint** Caused when the temperature of the outlet probe exceeds the high limit setpoint. This is an internal "software" limit switch and not an actual device. Check that the over temperature is not being caused by improper setup or operation of the boiler.	**Continuous**	**Auto Reset**
"ECO fault"	**Outlet temp is too high** Caused when the ECO (a thermostat) contacts in the Outlet probe are open when they should be closed. Fault may be due to high outlet temperature, bad switch contacts in the ECO, or disconnected wiring. Note: The ECO can be checked by disconnecting the outlet probe from the CCB and reading the resistance across the two active pins on the connector at the end of the probe cable. The value should be approximately 0 ohms when the temperature of the probe is less than 220°F.	**Flashing**	**HARD**
"Low Water"	**Water level is too low** Caused by the Low Water Cut Out device not closing its feedback switch contacts when it should. Check water line, switch contacts, wiring, LW/CO.	**Flashing**	**HARD**
"Low Gas"	**Gas pressure is too low** Caused by the Low Gas switch being open when it should be closed. Check gas line, switch contacts, wiring.	**Flashing**	**HARD**
"IRI Gas"	**IRI Gas Valve did not turn on** Caused by the IRI Gas Valve not closing its feedback switch contacts when it should. Could also be caused by a problem with the relay output on the CCB. Check output to IRI Gas Valve, switch contacts, wiring.	**Flashing**	**HARD**
"Powered Vent"	**Power vent not running** Caused by the Powered Vent device not closing its feedback switch contacts when it should. Could also be caused by a problem with the relay output on the CCB. Check output to powered vent, switch contacts, wiring.	**Flashing**	**HARD**
"High Gas Stg*"	**Gas pressure too high** Caused by the High Gas switch being open when it should be closed. Check gas line, switch contacts, wiring, or possible ruptured gas valve diaphragm.	**Flashing**	**HARD**
"Inlet Probe"	**Inlet probe shorted or open** Caused when the thermistor in the probe or the wiring to the probe is shorted or disconnected. Check the probe. Note: The thermistor and wiring can be checked by disconnecting the probe from the CCB and reading the resistance across the two active pins on the connector at the end of the probe cable. The value should be approximately 10K ohms (value will change slightly with changes in temperature).	**Flashing**	**HARD**
"Outlet Probe:"	**Outlet probe shorted or open** Caused when the thermistor in the probe or the wiring is shorted or disconnected. Check the probe. Note: the thermistor and wiring can be checked by disconnecting the probe from the CCB and reading the resistance across the two active pins on the connector at the end of the probe cable. The value should be approximately 10K ohms (value will change slightly with changes in temperature).	**Flashing**	**HARD**
"Tank Probe"	**Tank (Remote) probe shorted or open** Caused when the thermistor in the probe or the wiring is shorted or disconnected. Check the probe. Note: the thermistor and wiring can be checked by disconnecting the probe from the CCB and reading the resistance across the two active pins on the connector at the end of the probe cable. The value should be approximately 10K ohms (value will change slightly with changes in temperature).	**Flashing**	**HARD**
"Igniter Stg*"	**Igniter current is too low** Caused by a low current draw problem with the Silicon Nitride igniter. This may occur if the igniter is old, damaged, or disconnected and no longer draws the proper level of current. This condition will affect the ability of the igniter to get hot enough to fire the gas properly. Check the igniter and its associated wiring.	**Flashing**	**HARD**
"Igniter Pwr Stg*"	**Improper power applied to Silicon Nitride circuit** Caused by improper line power being applied to the Silicon Nitride circuitry. Check line connections. Paying particular attention to the earth ground connection. Also check that line voltage does not exceed 132 vac rms.	**Flashing**	**HARD**
"Igniter Hdwr Stg*"	**Hardware problems with Silicon Nitride circuit**	**Flashing**	**HARD**

TEMPERATURE REGULATION

⚠ DANGER

HOT WATER TEMPERATURES REQUIRED FOR AUTOMATIC DISHWASHER AND LAUNDRY USE CAN CAUSE SCALD BURNS RESULTING IN SERIOUS PERSONAL INJURY AND/OR DEATH. THE TEMPERATURE AT WHICH INJURY OCCURS VARIES WITH THE PERSON'S AGE AND TIME OF EXPOSURE. THE SLOWER RESPONSE TIME OF CHILDREN, AGED OR DISABLED PERSONS INCREASES THE HAZARDS TO THEM. NEVER ALLOW SMALL CHILDREN TO USE A HOT WATER TAP, OR TO DRAW THEIR OWN BATH WATER. NEVER LEAVE A CHILD OR DISABLED PERSON UNATTENDED IN A BATHTUB OR SHOWER.

THE WATER HEATER SHOULD BE LOCATED IN AN AREA WHERE THE GENERAL PUBLIC DOES NOT HAVE ACCESS TO SET TEMPERATURES.

It is recommended in storage tank applications that lower water temperatures be used to avoid the risk of scalding. It is further recommended, in all cases, that the water temperature be set for the lowest temperature which satisfies the user's hot water needs. This will also provide the most energy efficient operation of the boiler and minimize scale formation in the heat exchanger, thus prolonging the life of the boiler.

SETTING THE WATER HEATER TEMPERATURE AT 120°F WILL REDUCE THE RISK OF SCALDS. Some states require settings at specific lower temperatures. Table 10 below shows the approximate time-to-burn relationship for normal adult skin.

TABLE 10. RISK OF SCALDS

Temperature Setting	Time to Produce 2nd & 3rd Degree Burns on Adult Skin
Over 170°F	Nearly instantaneous
160°F	About 1/2 second
150°F	About 1-1/2 seconds
140°F	Less than 5 seconds
130°F	About 30 seconds
120°F or less	More than 5 minutes

USE ANTI-SCALD VALVE(S) in the hot water system to reduce the risks of scalding at points of use such as lavatories, sinks and bathing facilities.

AUXILIARY EQUIPMENT INSTALLATION

The following is a brief description of the equipment required for installations noted in this manual. All installations must comply with local codes.

The boilers described in this manual may be used for space heating or for the heating of potable water. If the heater is to be used for hydronic space heating, follow the instructions on pages 32 and 33 given for equipment required for installation. However, if units are to be used for heating potable water, the information describing specific systems is found starting on page 33. Installations must comply with all local codes.

WATER SUPPLY LINE

These boilers can be used ONLY in a forced circulation hot water heating system. Since most forced circulation systems will be of the closed type, install the water supply line as shown on piping diagrams, see Figures 20 and 22.

Fast filling of large pipe, old radiator installations (where high pressures are not available) requires bypassing of the pressure reducing valve. Generally, pressure purging is not possible with a well pump system. High point air venting is essential.

If the system is of the open type, a pressure reducing valve will not be required as the water supply to the system will be controlled by a manually operated valve. An overhead surge tank is required. A MINIMUM PRESSURE OF 15 PSI MUST BE MAINTAINED ON THE BOILER AT ALL TIMES to avoid potential damage to the boiler that may not be covered by the warranty.

EXPANSION TANK

If the system is of the closed type, install an expansion tank, see Figure 23. The sizing of the expansion tank for a closed system is very important and is directly related to the total water volume of the system. Refer to ASME or other reliable specifications for sizing.

An air separator as shown in the piping diagrams is recommended especially for modern commercial hydronic systems.

VENT VALVES

It is recommended that automatic, loose key or screwdriver type vent valves be installed at each convector or radiator.

SYSTEM HEADERS

Split systems with individual supply and return lines from the boiler room should normally have this piping connected to supply and return manifold headers near the boiler. To achieve good water distribution with minimum pressure drop for several circuits, manifolds should be larger than system loops.

The circuits should be spaced on the header at a minimum of 3" center to center. Install a balancing cock in each return line.

Manifold headers are recommended for split systems with or without zone valves and also those installations with zone circulators. If the system is to be split at remote points, good practice requires special attention be given to main pipe sizing to allow balancing of water flow.

COOLING PIPING

When the boiler is used in conjunction with a refrigeration system it must be installed so that the chilled medium is piped in parallel with the boiler. Appropriate valves, manual or motorized, must be provided to prevent the chilled medium from entering the boiler. Water temperature in the heating system must be reduced to less than 100°F before cooling system is started, or damage to the chiller unit may occur.

If the boiler is connected to chilled water piping or heating coils exposed to refrigerated air, the boiler piping system must be equipped with flow control valves or other automatic means to prevent gravity circulation through the boiler during the cooling cycle.

ONE GENESIS (MODEL GW) HOT WATER SUPPLY BOILER WITH HORIZONTAL TANK

PRESSURE RELIEF VALVE RATING SHOULD NOT EXCEED PRESSURE CAPACITY OF ANY COMPONENT IN THE SYSTEM.

PIPING SHOULD CONFORM TO LOCAL CODES.

BALL VALVES ARE SHOWN FOR SERVICING BOILER. HOWEVER, LOCAL CODES SHALL GOVERN THEIR USAGE.

IMPORTANT
SAFETY FLOW SWITCH PROTECTS THE BOILER IN CASE OF WATER SERVICE INTERRUPTION OR CIRCULATOR FAILURE.

- • PIPE TO OPEN DRAIN
- X FACTORY-INSTALLED ON UNIT
- †† SUPPLIED WITH UNIT
- ♦ FOR SYSTEMS WITH LARGE PEAK DEMANDS OR SEVERE COLD WATER CONDITIONS.
- † FIELD-INSTALLED

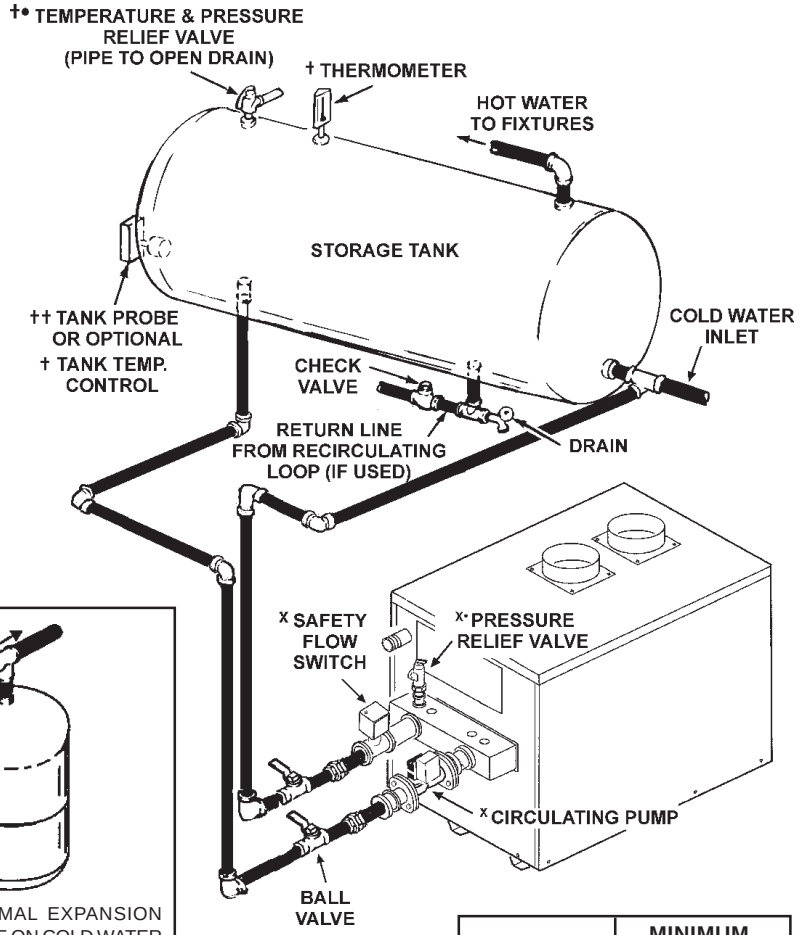

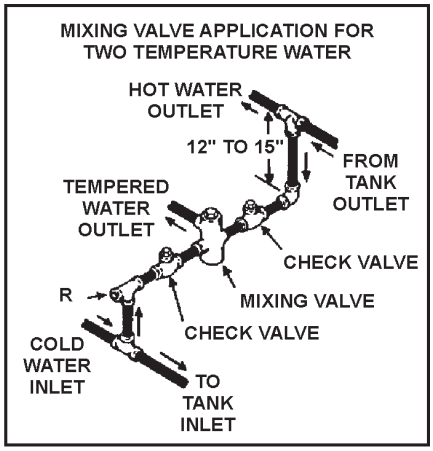

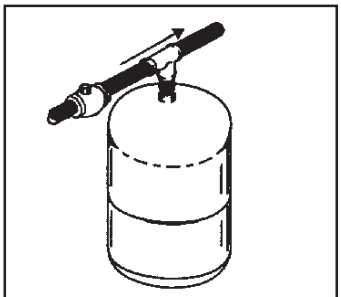

INSTALL THERMAL EXPANSION TANK OR DEVICE ON COLD WATER SUPPLY LINE, IF CHECK VALVE OR PRESSURE REDUCING VALVE IS USED IN SUPPLY.

CIRCULATING RETURN LINE CONNECTIONS

TEMPERED WATER LOOP, IF USED, CONNECT TO POINT "R".

STORED TEMPERATURE WATER LOOP, IF USED, CONNECT TO ANY OPENING NEAR BOTTOM OF TANK.

⚠ DANGER
TEMPERATURE SETTING SHOULD NOT EXCEED SAFE USE TEMPERATURE AT FIXTURES. SEE WATER TEMPERATURE WARNING ON PAGE 29, TABLE 10. IF HIGHER PREHEAT TEMPERATURES ARE NECESSARY TO OBTAIN ADEQUATE BOOSTER OUTPUT, ADD AN ANTI-SCALD VALVE FOR HOT WATER SUPPLIED TO FIXTURES.

MODELS	MINIMUM PIPE SIZES INCHES
GW-300 THRU 400	1 1/2"
GW-500 THRU 750	2"

FACTORY PUMP SIZING BASED ON 50 EQUIVALENT FEET OF PIPE.

FIGURE 20. SINGLE BOILER WITH HORIZONTAL TANK

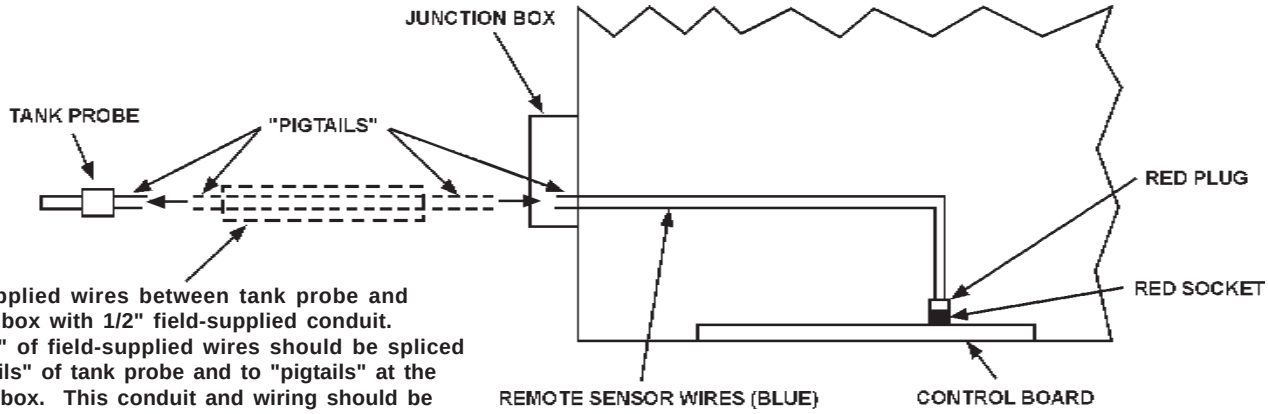

Field-supplied wires between tank probe and junction box with 1/2" field-supplied conduit. "Pigtails" of field-supplied wires should be spliced to "pigtails" of tank probe and to "pigtails" at the junction box. This conduit and wiring should be separate from any other conduit/wiring to guard against EMI (electromagnetic interference).

FIGURE 21. TANK PROBE INSTALLATION.

ONE GENESIS (MODEL GW) HOT WATER SUPPLY BOILER WITH VERTICAL TANK

PRESSURE RELIEF VALVE RATING SHOULD NOT EXCEED PRESSURE CAPACITY OF ANY COMPONENT IN THE SYSTEM.

PIPING SHOULD CONFORM TO LOCAL CODES.

BALL VALVES ARE SHOWN FOR SERVICING BOILER. HOWEVER, LOCAL CODES SHALL GOVERN THEIR USAGE.

IMPORTANT
SAFETY FLOW SWITCH PROTECTS THE BOILER IN CASE OF WATER SERVICE INTERRUPTION OR CIRCULATOR FAILURE.

- • PIPE TO OPEN DRAIN
- X FACTORY INSTALLED ON UNIT
- †† SUPPLIED WITH UNIT
- ♦ FOR SYSTEMS WITH LARGE PEAK DEMANDS OR SEVERE COLD WATER CONDITIONS.
- † FIELD-INSTALLED

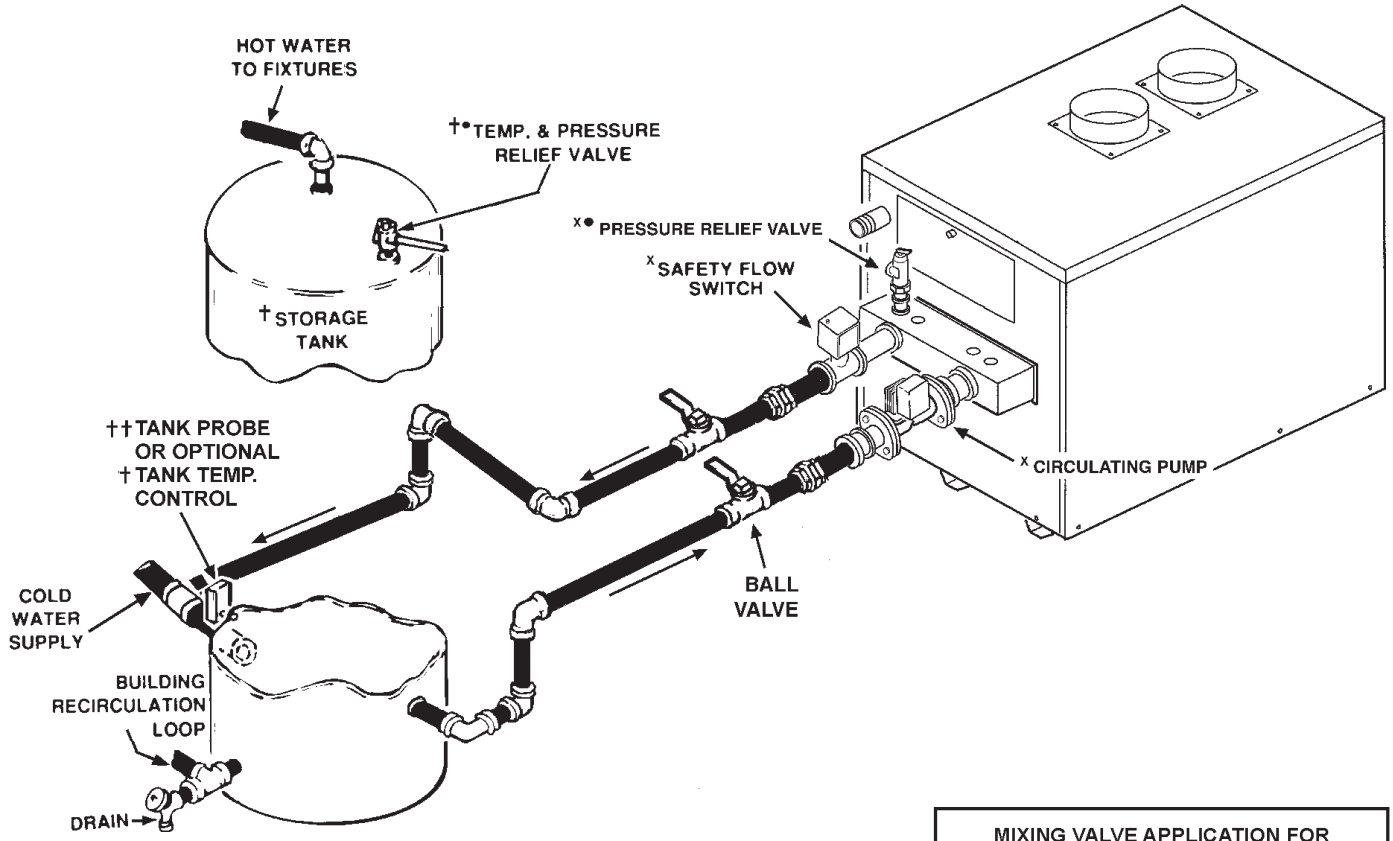

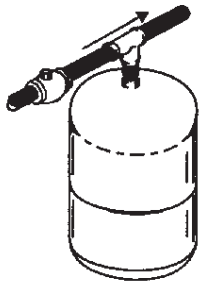

INSTALL THERMAL EXPANSION TANK OR DEVICE ON COLD WATER SUPPLY LINE, IF CHECK VALVE OR PRESSURE REDUCING VALVE IS USED IN SUPPLY.

MODELS	MINIMUM PIPE SIZES INCHES
GW-300 THRU 400	1 1/2"
GW-500 THRU 750	2"

FACTORY PUMP SIZING BASED ON 50 EQUIVALENT FEET OF PIPE.

DANGER

TEMPERATURE SETTING SHOULD NOT EXCEED SAFE USE TEMPERATURE AT FIXTURES. SEE WATER TEMPERATURE WARNING ON PAGE 29, TABLE 10. IF HIGHER PREHEAT TEMPERATURES ARE NECESSARY TO OBTAIN ADEQUATE BOOSTER OUTPUT, ADD AN ANTI-SCALD VALVE FOR HOT WATER SUPPLIED TO FIXTURES.

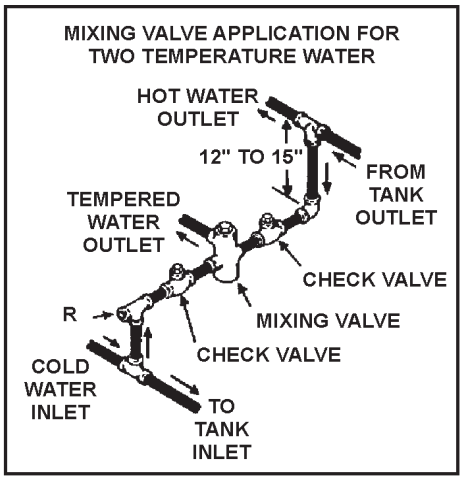

CIRCULATING RETURN LINE CONNECTIONS

TEMPERED WATER LOOP, IF USED, CONNECT TO POINT "R".

STORED TEMPERATURE WATER LOOP, IF USED, CONNECT TO ANY OPENING NEAR BOTTOM OF TANK.

FIGURE 22. SINGLE BOILER WITH VERTICAL TANK.

Primary/secondary pumping of both the chiller(s) and the boiler(s) is an excellent winter-summer change-over method, because cooling flow rates are much more than heating flow rates. In this way each system (heating or cooling) is circulated independently.

SYSTEM INSTALLATION - GENERAL

If the system is to be filled with water for testing or other purposes during cold weather and before actual operation, care must be taken to prevent a down draft entering the boiler or freezing air from contacting the system. Failure to do so may cause the water in the system to freeze with resulting damage to the system. Damage due to freezing is not covered by the warranty. Good practice requires that all piping, etc., be properly supported.

CONVENTIONAL SPACE HEATING INSTALLATION

Modern fin type boilers are exceptionally fast heating units. The low water volumes in relation to firing rates require special attention to water flow rates for smooth, efficient operation. These considerations for the A. O. Smith copper heat exchanger boilers are covered below.

Refer to Table 4 showing flow rate vs. pressure drop and temperature rise.

Figure 23 shows a typical installation of the boiler.

A system with several flow controlled zones, or with a 3-way mixing valve system could present a flow rate to the boiler of less than required for a maximum of 50°F temperature rise. Such a system should be designed with compensating bypasses to the boiler.

A system bypass should be installed, see Figure 23, to prevent boiler circulation starvation when the system zones call for reduced flow.

This bypass may also be used with multiple boilers manifolded for reverse-return flow. The system bypass would be installed from boiler outlet to suction side of pump.

INSTALLATION AS BOILER REPLACEMENT

Installation as boiler replacement on an old system with large water volume may result in condensation within the boiler on cold starts. This condensing of water vapor in the combustion area can be prevented if a portion of the system water flow is diverted past the boiler to cause an increase in boiler temperature rise.

BYPASS BALANCING

With systems where water temperature can be expected to drop appreciably due to long standby periods, or heavy draw down, a bypass pipe of at least 1" size with a balancing cock should be installed between the boiler inlet and outlet, see Figure 23. When the system first starts, the valve should be slowly opened until the condensing ceases. This adjustment remains at a permanent setting to establish required temperature rise across the boiler.

SPACE HEATING APPLICATIONS

Controlling of these systems is decided mainly by the type of building system controlling that is desired. A single boiler installation might be controlled directly from space temperature thermostat(s). Multiple boiler installations are more effective when the boilers are sequenced in and out of operation by some form of main water temperature controller. With one or two boilers, individual control set at progressive temperature may be used. For more than two boilers, electronic sequencing controlling is recommended.

Individual controls, or the separate stages of a step controller, should fire a boiler and also start the boiler loop circulator whenever that boiler is fired. Some large installations may require the firing of more than one boiler per stage.

The system or primary circulator may or may not be controlled by the boiler sequencer. When this pump is operated through the first switch of any type of step controller, care should be taken to determine if a motor starter is needed due to insufficient switch capacity.

If the primary pump is controlled by a manual switch or any other controllers, the electric current supply to the boiler group should be through the primary pump controller. The fast response of A.O. Smith boilers eliminates any need to maintain boiler temperature when the system is satisfied. Wiring should always prevent firing of boiler(s) when there is no water flow in the mains.

Installation diagrams show safety flow switches in the outlet piping from each boiler as good protection against any boiler being fired when the boiler loop circulator is not in operation. These safety flow switches will also provide some protection if there is a loss of water.

Multiple boiler installations are especially adapted to the use of outdoor reset for main water temperatures. This feature is not mandatory but offers smooth, efficient operation of a modern system.

Outdoor reset systems should utilize an automatic shutdown control if there is a continuous recirculating main and/or if the entire building is not under control of space temperature thermostats. A single bulb outdoor sensing control will serve this requirement. This precaution will prevent overheating of halls, stairways or other uncontrolled areas. There are occasions when outdoor temperatures are temporarily too warm for even a moderate amount of heating in these areas.

Space temperature controlling can be varied to meet the building requirements. Either the single thermostat, or multiple zone thermostats should control a common relay. This relay controls electric power to the system primary circulator and to the main water temperature controller. This provides for water movement in the system before the main temperature controller can start the secondary circulating pump or fire the boiler.

SPACE HEATING INSTALLATIONS

A. New Installation

Figure 23 shows piping and accessory arrangement for 1 or more boilers pumped independently of the primary system mains. Pipe sizing and boiler loop pump selection data, are shown in Table 2 for several different temperature rises across various boiler sizes.

Total heating requirements for the building can be supplied by a series of boiler loops all connecting to a common pipe joining the system supply and return mains. The supply and return branches of each boiler loop must join the common pipe only a short nipple length apart. The different sets of branches should be installed reasonably close together, but not necessarily to the short nipple length as required for the supply and return of each set. These branches may be made with tees or with welded connections.

The installer is reminded that the total boiler flow rates do not have to match the system flow rate. Flow rates through heat generator type boilers establish temperature rises. The deciding factor in choice of boiler temperature rise relates to the boiler inlet temperature. Boiler outlet, minus system temperature drop, is boiler inlet temperature. THE BOILER TEMPERATURE RISE SHOULD NOT RAISE THE OUTLET TEMPERATURE UP TO THE MAXIMUM 240°F (115°C) SETTING OF THE AUTOMATIC RESET LIMIT CONTROL.

If inlet temperature (plus temperature rise) of any boiler on the group exceeds 240°F (115°C), that boiler and all downstream boilers will shut down.

B. Commercial Boiler Replacements

Application of Genesis to a commercial boiler replacement with an old multiple pump installation is an excellent way to modernize the system. The A. O. Smith boiler(s) should be installed on a pipe loop with a separate circulating pump. See Table 2 to determine pipe sizes and operating ranges.

The following illustration shows how the system headers should be connected to pipe loop that is installed with the replacement boiler(s). Make-up water connections, and accessories are not shown.

Supply and return headers of the old system should be connected to the boiler loop with a pair of tees set close together. The boiler loop pump and the boiler(s) should be wired to operate only when any of the system pumps are in operation. The number of zone pumps that may be in operation at any particular time will take their required flow rate out from the first tee in the boiler piping. This water will be circulated through the proper branches from the supply header to the zones calling for heat. The water will be brought back to the return header and then into the second tee in the boiler pipe loop. There will be no conflict between the boiler pump and the zone pumps when the two tees in the boiler loop are placed close together.

Normal use of flow control valves is required to prevent cross circulation of zones as with any multiple pump system.

Large systems with multiple boilers should include main water temperature controls (with or without outdoor reset) to sequence the boiler on and off, in relation to the load on the system.

HOT WATER SUPPLY APPLICATIONS

WATER LINE CONNECTIONS

Where excessive heat exchanger condensation exists due to continued low inlet water temperatures (below 120°F), a bypass balance loop must be installed, see Figure 23.

1. **PAIR OF SHORT PIPE NIPPLES, PAIR OF BOILER LOOP TEES AND BALL VALVE BETWEEN SYSTEM SUPPLY AND RETURN - ONE SET PER EACH BOILER**
2. **BOILER PIPE LOOP (See Table 2-Pipe Sizing)**
3. **BOILER CIRCULATING PUMP (See Table 2-Pipe Sizing)**
4. **THERMOMETER**
5. **PRESSURE GAUGE**
6. **LOW WATER CUTOFF (If Required By Local Code.)**
7. **SAFETY FLOW SWITCH (Factory-Installed)**
8. **PRESSURE RELIEF VALVE [PRV] (Factory-Installed)**
9. **BOILER INLET - OUTLET**
10. **SYSTEM SUPPLY TEMPERATURE THERMOMETER**
11. **DRAIN or BLOW-DOWN VALVE**

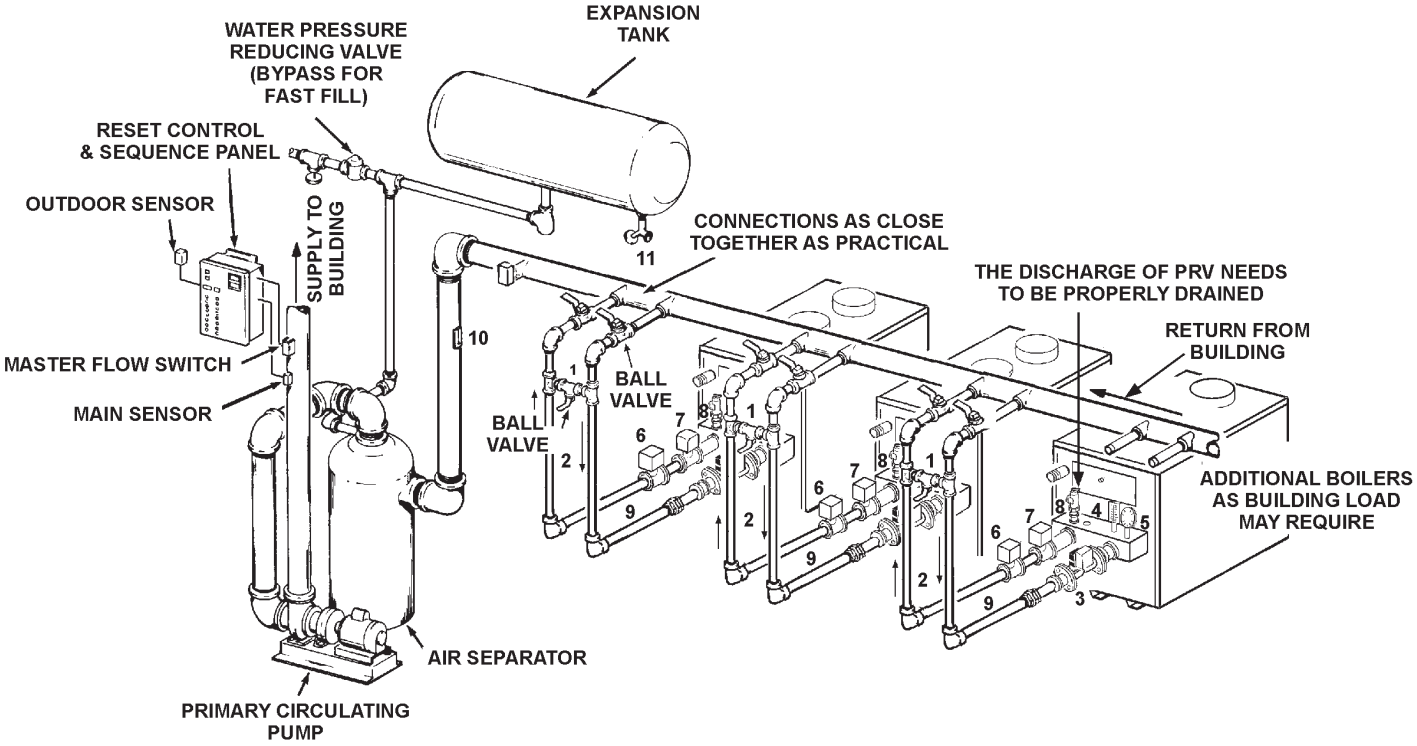

FIGURE 23. SINGLE OR MULTIPLE BOILER INSTALLATION DIAGRAM

HARD WATER CONDITIONS

Where hard water conditions exist, water softening or the threshold type of water treatment is recommended. This will protect the dishwashers, coffee urns, water heaters, water piping and other equipment. When water softening or water treatment is not practical, a comparatively easy method of periodic lime removal from the unit must be employed.

⚠ WARNING

Lime accumulation can reduce the life of the equipment, reduce efficiency and waste fuel. Boiler failure due to lime or scale buildup voids the warranty.

INTERNAL CONTAMINANTS

The system must be internally cleaned and flushed after a new or replacement unit has been installed to remove contaminants that may have accumulated during installation. This is doubly important when a replacement unit is installed into an existing system where Stop Leak or other boiler additives have been used.

All systems should be completely flushed with a grease removing solution to assure trouble-free operation. Pipe joint compounds, soldering paste, grease on tubing and pipe all tend to contaminate a system.

Failure to clean and flush the system can cause solids to form on the inside of the heat exchanger, can produce acid concentrations that become corrosive, can allow excessive amounts of air or other gases to form which could block circulation, foul system accessories and damage circulator seals and impellers.

It is recommended that after installation, the boiler and system when filled should include the proper percentage of cleaning solution related to approximate water volume of the system. Fire and circulate for about one hour and then flush clean with fresh water. Commercial grease removing solutions are available.

Before operating the boiler, the entire system must be filled with water, purged of air and checked for leaks. Do not use Stop Leak or other boiler compounds. The gas piping must also be leak tested.

PRECAUTIONS

If the unit is exposed to the following, do not operate boiler until all corrective steps have been made by a qualified serviceman:

1. Exposure to fire.
2. If damaged.
3. Firing without water.
4. Sooting.

If the heater has been exposed to flooding it must be replaced.

IMPORTANT

ONLY QUALIFIED PERSONNEL SHALL PERFORM THE INITIAL FIRING OF THE HEATER. AT THIS TIME THE USER SHOULD NOT HESITATE TO ASK THE INDIVIDUAL ANY QUESTIONS REGARDING THE OPERATION AND MAINTENANCE OF THE UNIT.

FILLING AND VENTING

1. Fast fill system through bypass until pressure approaches desired system pressure. Close bypass valve and permit pressure to be established by the pressure reducing valve.
2. Vent all high points in system to purge system of air.

Provisions should be made to permit manual venting of radiators or convectors.

IMPORTANT

UNDER NO CIRCUMSTANCES SHALL THE GAS PRESSURE MEASURED AT THE BURNER MANIFOLD EXCEED THAT STATED ON THE BOILER RATING PLATE. OVERFIRING WILL RESULT IN DAMAGE TO THE BOILER, AS WELL AS INCREASED RISK OF FIRE, SOOTING AND ASPHYXIATION.

MAIN BURNERS

Check main burners every three months for proper flame characteristics.

The main burner should display the following characteristics:

- Provide complete combustion of gas.
- Cause rapid ignition and carry over of flame across entire burner.
- Give reasonably quiet operation during initial ignition, operation and extinction.
- Cause no excessive lifting of flame from burner ports, see Figure 1.

If the preceding burner characteristics are not evident, check for accumulation of lint or other foreign material that restricts or blocks the air openings to the burner or boiler.

NOTE: Cleaning of main burners. Shut off all gas and electricity to unit.

1. Remove main burners from unit.
2. Check that burner venturi and ports are free of foreign matter.
3. Clean burners with bristle brush and/or vacuum cleaner. DO NOT distort burner ports.
4. Reinstall burners in unit. Ensure that all the screws on the burner flange are tightened securely so that the gasket will provide a good seal. Also, ensure that each orifice is centered with the venturi opening of every burner. Also check for good flow of combustion and ventilating air to the unit.

Also check for good flow of combustion and ventilating air to the unit.

After placing the boiler in operation, check the ignition system safety shut-off devices for proper operation. To accomplish this with the main burners operating, close the valve on the manifold. Within four seconds the main burners should extinguish. If this does not occur, discontinue gas supply by closing main manual shut-off and call a qualified serviceman to correct the situation. If the burners extinguish, then light boiler in accordance with lighting and operating instructions.

For installations above 2000 feet (600 m), refer to HIGH ALTITUDE INSTALLATIONS in the installation section.

PRE-TROUBLESHOOTING

Before any extensive troubleshooting, ensure that:

- Power (120 VAC) is supplied to the appliance.

- System control (tank probe, thermostat, etc.) is calling for appliance operation (call for heat).
- Other contacts (switches) are closed (low water cutoff, flow switch, limit controls, pressure switches, etc.)
- Gas supply pressure is within the maximum and minimum operating ranges listed on the appliance rating plate/label.
- Appliance is wired according to wiring diagram.

NOTE: Shorting the thermostat wiring to ground in the 24 volt circuit will blow the 3 amp fuse.

- All wire terminals/connectors are firmly attached to valves, modules, switches, limit controls, etc.
- There has been no damage caused by freezing, inoperative pumps, etc.

DESCRIPTION OF COMPONENTS

DIFFERENTIAL PRESSURE SWITCH

The differential pressure switch ensures that a sufficient differential exists between the air pressure in the pre-mix chamber and the inlet of the burner for safe, low NOx combustion. The switch has two pressure taps marked "+" (positive) and "-" (negative). Silicone tubing is run from the positive pressure tap of the switch to a tap on the control panel to measure the air pressure in the pre-mix chamber. The negative pressure tap measures the pressure taken at the burner's auxiliary tube. Connections can be seen by removing the lower front jacket panel. It is important that this panel remain sealed at all times while the boiler is operating.

BLOCKED FLUE PRESSURE SWITCH

The blocked flue pressure switch ensures that the flue gas vent is clear. This pressure switch is normally closed and only opens on the fault conditions.

FLAME SENSOR

The flame sensor acts to prove the flame has carried over from the ignitor to the right-most burner of stage 1. If no flame is sensed, the gas valve(s) will close automatically. And If no flame is sensed on three (or one) ignition trials the boiler will lock out. Upon lockout, manually push the SELECT button on the UIM to restart the boiler.

WATER FLOW SWITCH

The Water Flow Switch is installed at the boiler outlet to prevent burner operation in the event of inadequate water flow through the boiler. The Water Flow Switch is a single pole, normally open switch that will close its contacts when increasing water flow rate is encountered. This switch is factory-set, but may require field adjustment. The contacts will open when the flow rate drops below the adjusted setting and the gas valve(s) will close turning off the gas to the burners.

LIMIT CONTROLS

This boiler contains two limit controls built into the outlet water probe. The automatic reset limit is adjustable from 90°F to 235°F.

The manual reset limit is factory-set at 250°F. Once the manually reset limit opens, the gas valve(s) will close and the boiler will lockout. Upon lockout, manually push the SELECT push-button on the UIM to restart the boiler.

ON/OFF SWITCH

The ON/OFF switch is a single-pole, single-throw rocker switch. The switch provides 120VAC from the line source to the boiler.

COMBUSTION AIR BLOWER

The bearings in the motor are pre-lubricated and sealed at the factory. No further oiling of the bearings is required for the life of the motor.

GENERAL MAINTENANCE

These boilers are designed to give many years of efficient and satisfactory service when properly operated and maintained. To assure continued good performance, the following recommendations are made.

The area around the unit should be kept clean and free from lint and debris. Sweeping the floor around the boiler should be done carefully. This will reduce the dust and dirt which may enter the burner and heat exchanger, causing improper combustion and sooting.

THE FLOW OF COMBUSTION AIR TO THE BOILER MUST NOT BE OBSTRUCTED.

THE BOILER AREA MUST BE KEPT CLEAR AND FREE FROM COMBUSTIBLE MATERIALS, GASOLINE AND OTHER FLAMMABLE VAPORS AND LIQUIDS.

Any safety devices including low water cutoffs used in conjunction with this boiler should receive periodic (every six months) inspection to assure proper operation. A low water cutoff device of the float type should be flushed every six months.

Periodic checks, at least twice a year, should be made for water and/or gas leaks.

More frequent inspections may be necessary depending on water conditions.

The boiler-mounted gas and electrical controls have been designed to give both dependable service and long life. However, malfunction can occur, as with any piece of equipment. It is therefore recommended that all components be checked periodically by a qualified serviceman for proper operation.

RELIEF VALVE

The safety relief valve should be opened at least twice a year to check its working condition. This will aid in assuring proper pressure relief protection. Lift the lever at the top of the valve several times until the valve seats properly and operates freely.

⚠ DANGER

THE WATER PASSING OUT OF THE VALVE DURING CHECKING OPERATION MAY BE EXTREMELY HOT. BEFORE OPERATING RELIEF VALVE, MAKE SURE DRAIN LINE IS INSTALLED TO DIRECT DISCHARGE TO A SAFE LOCATION SUCH AS AN OPEN DRAIN, TO AVOID SCALDING OR WATER DAMAGE.

WARNING

SHOULD OVERHEATING OCCUR OR THE GAS SUPPLY FAIL TO SHUT OFF, TURN OFF THE MANUAL GAS CONTROL VALVE TO THE APPLIANCE.

COMBUSTION AIR FILTER

If the combustion air supply to the boiler contains dust, dirt, drywall dust etc., a filter must be installed. Air filter is not supplied with the boiler as shipped from the factory. The installer must provide a filtering system in the air inlet to the boiler if dust, dirt or construction dirt can be pulled into the boiler through the inlet air piping.

BLOWER COMPARTMENT

The blower compartment should be cleaned annually to remove any dirt and lint that may have accumulated in the compartment or on the blower and motor. Buildups of dirt and lint on the blower and motor can create excessive loads on the motor resulting in higher that normal operating temperatures and possible shortened service life.

VENTING MAINTENANCE

It is recommended that the intake and exhaust piping of the appliance be checked every 3 months for dust, condensate leakage, deterioration and carbon deposits.

Qualified serviceman should follow this procedure when the boiler's intake and exhaust piping need cleaning.

WARNING

DO NOT USE A NYLON BRUSH OR OTHER STATIC CREATING MATERIAL TO CLEAN DUST AND CARBON DEPOSITS FROM HEATING SURFACES AND VENT.

SUCH DEPOSITS ARE FLAMMABLE AND MAY BE IGNITED BY STATIC ELECTRICITY. USE A METAL BRUSH TO MINIMIZE THE DANGER OF EXPLOSION.

1. Turn off the electrical power, and manual gas shut-off.
   - Allow boiler parts to cool before disassembly.
2. Remove the vent pipe.
   - Check parts and chimney for obstructions and clean as necessary.
3. Remove burners from boiler and other metal parts as required to clean as necessary.
   - Refer to parts list supplied with this manual for disassembly aid.
4. Clean and reinstall the parts removed in steps 2 and 3.
   - Be sure the vent pipe has a minimum upward pitch of one quarter inch per foot of length and is sealed as necessary.
5. Restore electrical power and gas supply to boiler.
   - Check for gas leaks and proper boiler and vent operation.

HEAT EXCHANGER PREVENTIVE MAINTENANCE

In most water supply systems some solids exist. As the water is heated, these tend to drop out depositing as scale or lime. This scale must be removed before the heat exchanger tubes become blocked.

CAUTION

Lime accumulation can reduce the life of the equipment, reduce efficiency and waste fuel. Boiler failure due to lime or scale buildup voids the warranty.

See section on CIRCULATING PUMP to ensure you have selected the proper size pump for your situation.

DELIMING

The amount of calcium carbonate (lime) released from water is in direct proportion to water temperature and usage. The higher the water temperature or water usage, the more lime deposits are dropped out of the water. This is the lime scale which forms in pipes, boilers and on cooking utensils.

The usage of water softening equipment greatly reduces the hardness of water. However, this equipment does not always remove all of the hardness (lime). For this reason it is recommended that a regular schedule for deliming be maintained.

The time between cleaning will vary from two to six months depending upon water conditions and usage. A change of approximately 5°F in the normal temperature rise through the boiler is usually an indication that scale should be removed. For long life, copper or brass is recommended for all valves, pipe and fittings, see Figures 22 and 23.

TUBE CLEANING PROCEDURE
MECHANICAL REMOVAL OF DEPOSITS

Establish a regular inspection schedule, the frequency depends on the local water conditions and severity of service. Do not let the tubes clog up solidly. Clean out deposits over 1/16 inch thickness.

To service heat exchanger tubes remove return header casting, side opposite the water connections. Use a standard 9/16" deep socket ratchet to remove the nuts, exposing the tube ends. Inspect to ensure tubes are free of scale and deposits. If scaled, remove deposits with a stiff wire brush or mechanical tube cleaner to bare metal. Install new O rings and reinstall return header casting. Flush system.

Note: Removal of the heat exchanger is not required.

CAUTION

If heat exchanger maintenance requires tubing replacement, special provisions shall be taken to ensure that the damaged tubes are carefully removed.

Replacement tubes must be properly installed and expanded into the tube plate.

Over rolling, misalignment of tubes or improper tightening of the assembly may result in leaks or damage to the heat exchanger. Contact your A. O. Smith dealer for detailed instructions.

Start-up Instructions

A.O.SMITH
WATER PRODUCTS COMPANY

Burkay GENESIS
A.O.Smith Space Saver Gas Boiler

COPPER BOILERS FOR HYDRONIC HEATING AND HOT WATER SUPPLY

SERIES 300, 301,302, 303, 2-Stage Units

Before starting the boiler please review the Boiler's Instruction Manual (AOS Part Number 212130-000) supplied with the boiler. This is a powered combustion copper tube boiler. If you are not familiar with a powered combustion boiler please contact an authorized A.O. Smith representative before starting the unit.

This boiler is equipped with an EMC5000 control system. The EMC5000 displays the system status and errors that may occur during normal operation. For full details on the controls please refer to the Instruction Manual supplied with the boiler. The boiler must be installed according to the Installation Instructions provided with the unit. Failure to do so will void the warranty.

Prior to starting the boiler for the first time check the following:

Before applying gas or water to the system, the power line electrical hook-up can be verified. If connected, remove the plug in connectors (J1, J2, J3) on the Power Distribution Board (PDB) and place the jumper (JP1) on the PDB in the "Test" position. (Note: Leaving the connectors connected during this test will product invalid light indications that will not match the table.)

Apply electrical power to the system and observe the three colored LED's on the PDB. Verify that the proper light turns on according to the following table:

Line Connection Status	Green LED	Red LED	Yellow LED
Proper connections	(On)	Off	(On)
Open Ground	Off	(On)	Off
Reverse Polarity	(On)	(On)	Off
Open Hot	Off	Off	Off
Open Neutral	(On)	(On)	(On)
Reverse Hot & Ground	Off	(On)	(On)
Hot on Neutral with Hot Open	Off	(On)	Off

When connections are correct, turn off power, move jumper to "Run" position, and reconnect cables to PDB. (Note: With the jumper in the "Run" position, only the Green LED functions.)

Prior to turning on the gas, proper operation of much of the system can be verified. With the water turned on, start the system and allow it to run through a heating cycle. It should stop when it checks for flame and declare a fault. This will verify that the pump, flow switch, igniter, gas valve, blower and blower differential pressure switch are all functioning.

Gas Supply Lines are sized in accordance with ANSI Z223.1 National Fuel Gas Code or CAN/CSA-B149.1-00 or (most recent edition).

Minimum Inlet Gas Supply Pressure of 5.5" W.C. for Natural Gas or 11.0" W.C. for Propane.

Check all gas supply lines for leaks.

Check that all venting is properly sealed in accordance with the Instruction Manual.

Main power is dedicated 120 VAC, 60Hz, single phase, rated for 20 Amps.

Turn **"ON"** gas and water supply to the boiler (DO NOT DRY FIRE THE BOILER).

Purge air from the gas and water lines.

Make sure the boiler is not damaged. If the unit is damaged contact an A.O. Smith representative for service or replacement parts prior to starting the boiler.

PLACE THESE INSTRUCTIONS ADJACENT TO BOILER AND NOTIFY OWNER TO KEEP FOR FUTURE REFERENCE.

Temperature Setpoints (Dual Stage Ignition)

Before starting the boiler, refer to the "Operating Setpoint Adjustment Procedure" section in the boiler's Instruction Manual.

Starting the boiler for the first time.

The boiler is tested at the factory and should start properly if installed in accordance with the Boiler's Instruction Manual. The boiler may have a slight rumble on a cold start. This is normal and will not harm the unit nor is it a safety issue. The rumble is caused by cold water in the heat exchanger creating a cold combustion chamber. Thus, the rumble occurs. Once the boiler has been started from a cold start the rumble will disappear on subsequent starts.

Should the boiler not start, a minor air shutter adjustment may be required by the installer, as atmospheric conditions may change the amount of air supplied to the unit at the given installation site (see figure 1 for final flame appearance).

When adjusting the air shutter, 1/2 turns on the air shutter adjustment screw (located at the front of the air shutter) are recommended. If the boiler continues to start hard or rough after the initial cold start, adjust the air shutter until the boiler starts smoothly.

DO NOT try to adjust the gas air mixture to make the flame sit on the burner, see Figure 1 for final flame appearance.

This is a powered burner and the flame is not supposed to be on the burner. The flame should be just above the burner deck approximately 1/8" and blue in color, see Figure 1.

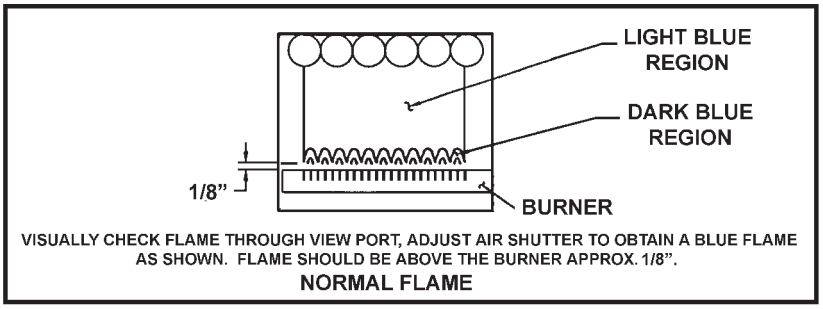

FIGURE 1. BURNER FLAME CHARACTERISTICS

Visually check flame characteristics through either view port located under the headers on the boiler. Figure 1 above shows the normal flame condition. Also, refer to the flame label on the unit (adjacent to the view port).

A. **Normal Flame**: A normal flame is blue without yellow tips. No adjustments required.

B. **Yellow Tips:** Yellow tips are caused by a lack of air to the burner.

Possible cause: Blocked intake. ..... Solution: Remove blockage.
Possible cause: Air shutter. ..... Solution: Open Air Shutter until normal flame occurs.
Possible cause: Gas pressure ..... Solution: Check manifold pressure and adjust to proper setting.

C. **Yellow Flames**: Yellow flames are caused by a lack of air to the burner.

Possible cause: Blocked intake. ..... Solution: Remove blockage.
Possible cause: Blocked burner. ..... Solution: Remove blockage.
Possible cause: Air shutter. ..... Solution: Open air shutter until normal flame occurs.
Possible cause: Gas pressure. ..... Solution: Check manifold pressure and adjust to proper setting.

D. **Lifting Flames**: Lifting flames are caused by over firing the burners or excess air.

Possible cause: Gas pressure. ..... Solution: Check manifold pressure and adjust to proper setting.
Possible cause: Air shutter. ..... Solution: Close the air shutter until normal flame occurs.

Gas Manifold Pressure Settings:

GB & GW-300 thru 750: 3.5" W.C (Natural Gas)
GB & GW-300 thru 750: 10.0" W.C. (Propane Gas).

For additional information please refer to the User's Manual supplied with the boiler or contact:

A.O. Smith Technical Services at 1-800-527-1953

7 a.m. to 7 p.m. Central Time.

Our Internet Site is another source of information 24 hours a day.

www.aosmithwaterheaters.com

NEW BOILER LIMITED WARRANTY

A. O. Smith Corporation, the warrantor, extends the following LIMITED WARRANTY to the owner of this hot water boiler:

1. If within TEN years after initial installation of the boiler, the heat exchanger shall prove upon examination by the warrantor to be defective in material or workmanship, the warrantor, at his option, will exchange or repair such part or portion. This term is reduced to FIVE years if this boiler is used for volume hot water supply purposes other than hydronic space heating.
   a. This warranty is extended to the owner for all other parts or portion during the FIRST year following initial installation of this boiler.
   b. The warranty on the repair or replacement of the part or portion will be limited to the unexpired term of the original warranty.

2. **CONDITIONS AND EXCEPTIONS**
   This warranty shall apply only when the boiler is installed in accordance with local plumbing and building codes, ordinances and regulations, the printed instructions provided with it and good industry practices. In addition, an appropriately sized safety relief valve certified to the ASME Boiler and Pressure Vessel Code must have been installed and fresh water used for filling and makeup purposes;
   a. This warranty shall apply only when the boiler is used:
      (1) at temperatures not exceeding the maximum setting of its operative and/or high limit control;
      (2) at water pressure not exceeding the working pressure shown on the boiler;
      (3) when filled with boiler water, free to circulate at all times and with the heat exchanger free of damaging scale deposits;
      (4) in a noncorrosive and non-contaminated atmosphere;
      (5) in the United States, its territories or possessions, and Canada;
      (6) at a water velocity flow rate, not exceeding or below the Boiler's designed flow rates;
   b. Any accident to the boiler, any misuse, abuse (including freezing) or alteration of it, any operation of it in a modified form will void this warranty.

3. **SERVICE AND REPAIR EXPENSE**
   Under this limited warranty the warrantor will provide only a replacement part. The owner is responsible for all other costs. Such costs may include but are not limited to:
   a. Labor charges for service removal, repair or reinstallation of the component part;
   b. Shipping, delivery, handling, and administrative charges for forwarding the replacement part from the nearest distributor and returning the claimed defective part to such distributor.
   c. All cost necessary or incidental for any material and/or permits required for installation of the replacement.

4. **LIMITATIONS ON IMPLIED WARRANTIES**
   Implied warranties, including any warranty of merchantability imposed on the sale of this boiler under state law are limited to one (1) year duration for the boiler or any of its parts. Some states or provinces do not allow limitations on how long an implied warranty lasts, so the above limitation may not apply to you.

5. **CLAIM PROCEDURE**
   Any claim under the warranty should be initiated with the dealer who sold the boiler, or with any other dealer handling the warrantor's products. If this is not practical, the owner should contact:

U.S. Customers	Canadian Customers
A. O. Smith Water Products Company	A. O. Smith Enterprises Ltd.
5621 West 115th Street	P. O. Box, 310 - 768 Erie Street
Alsip, IL 60803	Stratford, Ontario N5A 6T3
Telephone: 800 323-2636	Telephone: (800) 265-8520

   a. The warrantor will only honor replacement with identical or similar parts thereof which are manufactured or distributed by the warrantor.
   b. Dealer replacements are made subject to in-warranty validation by warrantor.

6. **DISCLAIMERS**
   NO OTHER EXPRESS WARRANTY HAS BEEN OR WILL BE MADE ON BEHALF OF THE WARRANTOR WITH RESPECT TO THE MERCHANTABILITY OF THE BOILER OR THE INSTALLATION, OPERATION, REPAIR OR REPLACEMENT OF THE BOILER. THE WARRANTOR SHALL NOT BE RESPONSIBLE FOR WATER DAMAGE, LOSS OF USE OF THE UNIT, INCONVENIENCE, LOSS OR DAMAGE TO PERSONAL PROPERTY OR OTHER CONSEQUENTIAL DAMAGE. THE WARRANTOR SHALL NOT BE LIABLE BY VIRTUE OF THIS WARRANTY OR OTHERWISE FOR DAMAGE TO ANY PERSONS OR PROPERTY, WHETHER DIRECT OR INDIRECT, AND WHETHER ARISING IN CONTRACT OR TORT.
   a. Some states or provinces do not allow the exclusion or limitation of the incidental or consequential damage, so the above limitations or exclusions may not apply to you.
   b. This warranty gives you specific legal rights, and you may also have other rights which vary from state to state or province to province.

Fill in the following for your own reference. Keep it. Registration is not a condition of warranty. The model and serial number are found on the boiler's rating plate.

Owner _____

Installation Address _____

City and State or Province _____ Postal/Zip Code _____

Date Installed _____ Model No. _____ Serial No. _____

Dealer's Name _____

Dealer's Address _____ Phone No. _____

FILL IN WARRANTY AND KEEP FOR FUTURE REFERENCE

A.O.SMITH
WATER PRODUCTS
COMPANY

5621 W. 115TH STREET, ALSIP, IL 60803
Phone: 800-433-2545 Fax: 800-433-2515
www.aosmithwaterheaters.com